HVG POWER TECHNOLOGY SERVICES LIMITED PMI

Company Profile

POWER TECHNOLOGY SERVICES – Hydra Valve World Wide Group LLC
Dubai - Abu Dhabi - UAE
Telephone: +971 4 277 4566 Fax: +971 4 277 4566
M: +971 52 795 1548
www.powerpipelinetechnology.com
email: info@hvwwg.com

GET CONNECTED WITH POWER AND SAVE RESOURCES

ABOUT POWER Pipeline Technology

Power Technology Services was established in 1996 by experienced managers who have been in the oil and gas industry since 1980 and have a huge amount of experience. During Power's 10 year history we have established a strong reputation in the hot tapping field and we will continue to improve our reputation in the future.

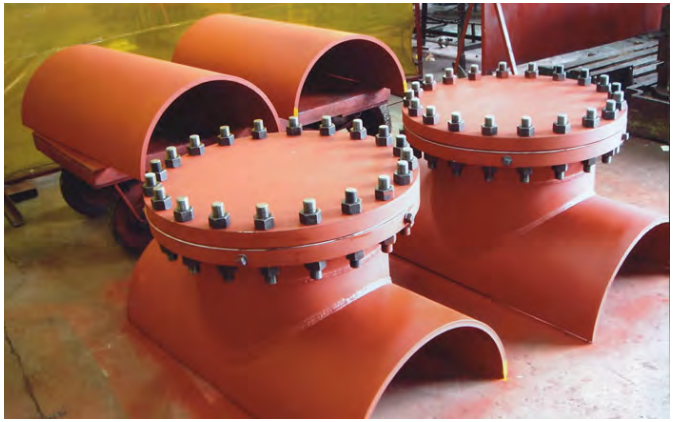

Power has a manufacturing unit based in Dubai covering an area of 355,000 sq metres and a service centre covering an area of 30,000 sq metres. From this location we cover the Globe. We also have a full service centre in the Abu Dhabi.

Our products, equipment and field services are designed to keep pipeline systems on stream and to prevent shutdowns. We design to domestic and foreign codes/standards and our quality control system assures the highest industry requirements are met and maintained through our ISO 9001/14001 procedures.

WHAT WE OFFER

- **Manufacturing**

- **Field Services**

WHAT WE OFFER - MANUFACTURING

Manufacturing Division

- Hot Tapping equipment from 1/2" to 96"
- Linestopping equipment including Powerstop 1/2" to 60"
- Equipment specials to suit the clients needs
- Linestop and Hot Tap fittings, High and low pressure
- Repair Clamps, leak sealing clamps, mufflers

We can also offer full rolling services from 1mm to 25 mm plate to 4 metre diameter tubing, the fabrication and machining shop is fully equipped with Webster and Bennets, Vertical and Horizontal borers and up to date CNC Turning machines.

WHAT WE OFFER – FIELD SERVICE

Field Service Division

Hot Tapping 1/2" – 96" from vacuum to 1480 PSIG as off the shelf standard. Temperatures to 700 degrees Fahrenheit as standard

Line stopping We offer the most diversified selection of linestopping methods in the world including Powers unique Power stop process. Sizes 1/2" – 60" both low pressure and high pressure

Valve Inserting Valve Inserting The installation of a unique Power Valve into a pressurised system, mechanical or welded. Sizes 3" – 48'

Leak Sealing Leak Sealing On stream leak sealing from vacuum to 6000 psi Temperature from – 20 degrees Fahrenheit to 1500 degrees Fahrenheit Service, Water, Stream, Air and Process

WHAT WE OFFER - ENGINEERING

Engineering
Powers Design team have engineered special procedures that go beyond our normal field applications, such as top and bottom coupon samples over 90” in length to retrieve the bottom coupons, instrument insertion, sub-sea taps/stops and live camera insertion into pipelines under pressure.

Leak detection services are also available through our agency agreements.

Problem solving has become a major part of the companies workload and the flexibility of a small organisation enables early response to “one off” situations.

To further help our clients, the company offers on-site welding facilities, fully coded pipeline welders and can offer a full turn key operation.

Power is on call 24 hours a day, 365 days a year, our response time is based upon our customer needs.

QUALITY MANAGEMENT SYSTEMS - CERTIFICATION

QMS Quality Management Systems

Registration Certificate

This document certifies that the quality administration systems of

POWER TECHNOLOGY SERVICES LIMITED

have been assessed and approved by QMS Quality Management Systems to the following quality administration systems, standards and guidelines:-

BS EN ISO 9001 : 2000

The approved quality administration systems apply to the following:-

REPAIR, MAINTENANCE AND SUPPLY OF PIPELINE FITTING TO ASSIST WATER, OIL AND GAS COMPANIES. SPECIALISING IN HOT TAPPING, LINE STOPPING, PIPE FREEZING, COLD CUTTING, QUADRINA FERRULE INSTALLATION, SARCO STOPPER AND QUICK VALVE INSTALLATIONS.

Original Approval: 17th May 2001

Current Certificate: 17th May 2001

Certificate Expiry: 16th May 2011

Certificate Number: GB 8526

ISO 9001
REGISTERED FIRM

On behalf of QMS International plc

QMS

QMS Quality Management Systems

Registration Certificate

This document certifies that the environmental management systems of

POWER TECHNOLOGY SERVICES LIMITED

have been assessed and approved by QMS Quality Management Systems to the following environmental management systems, standards and guidelines:-

BS EN ISO 14001 : 1996

The approved environmental management systems apply to the following:-

REPAIR, MAINTENANCE AND SUPPLY OF PIPELINE FITTING TO ASSIST WATER, OIL AND GAS COMPANIES, SPECIALISING IN HOT TAPPING, LINE STOPPING, PIPE FREEZING, COLD CUTTING, QUADRINA FERRULE INSTALLATIONS, SARCO STOPPER AND QUICK VALVE INSTALLATIONS.

Original Approval: 13th March 2003

Current Certificate: 13th March 2003

Certificate Expiry: 12th March 2013

Certificate Number: GB 11011

ISO 14001
REGISTERED FIRM

IAC

QMS

POWER
TECHNOLOGY SERVICES LIMITED

PMI

HOT TAPPING AND PIPELINE STOPPING SERVICES

To the oil, gas, water, petrochemical and power industries and associated contractors.

Our service centres in the UK & Dubai are equipped with a wide range of linestopping and drilling equipment, designed to reduce down time or shutdowns.

We offer a fast and reliable response to your enquiries and hold stocks of pipeline fittings to suit client requirements. This service is particularly useful in emergency situations.

We can do under pressure hot taps into pipelines, tanks or blind flanges. (carbon steel or stainless steel)

Our plugging equipment includes hinged plugging heads, using a sealing element, various elements materials are available on request, sizes from 3” to 60” diameter.

We also have a range of low pressure 12 bar plugging heads called the Power Stop suitable for lines 3/4” inch through to 6” including 3” and 5”.

HOT TAPPING

Hot Tapping or pressure tapping is the method of making a connection to existing pipelines or vessels while the existing system is under pressure.

This method employs a drilling or tapping machine and a full bore valve and either a nozzle or a full encirclement fitting welded to the existing pressurised system.

The drilling machine, generally consists of a telescoping boring bar mechanically driven by our specially designed gear box which advances a cutting tool.

A necessary element in the hot tap procedure is the full bore valve (however if the client decides that the line is to be depressurised a valve is not required).

If a valve is required this allows the tapping machine to be removed after the cutting operation, flange ratings are from 150lb through 900lb ANSI ratings.

LINE STOPPING

Line stopping is a means of stopping flow and providing a shut. Line stopping can be used to
isolate piping systems for repairs and alterations.

Line stopping can be performed on many types of piping materials and for a variety of media such as gas, water, sewage and oil.

Why use line stopping?

- Service to consumers process industries and sensitive services is maintained.
- Contamination and / or loss of fluid or gas does not occur.
- Toxic or harmful product is not released.
- Fire protection not affected.
- No time wasted draining the systems.
- Personnel are used efficiently on effecting repair.
- Eliminates need for bulk transfer and storage of harmful fluids.

LINE STOPPING

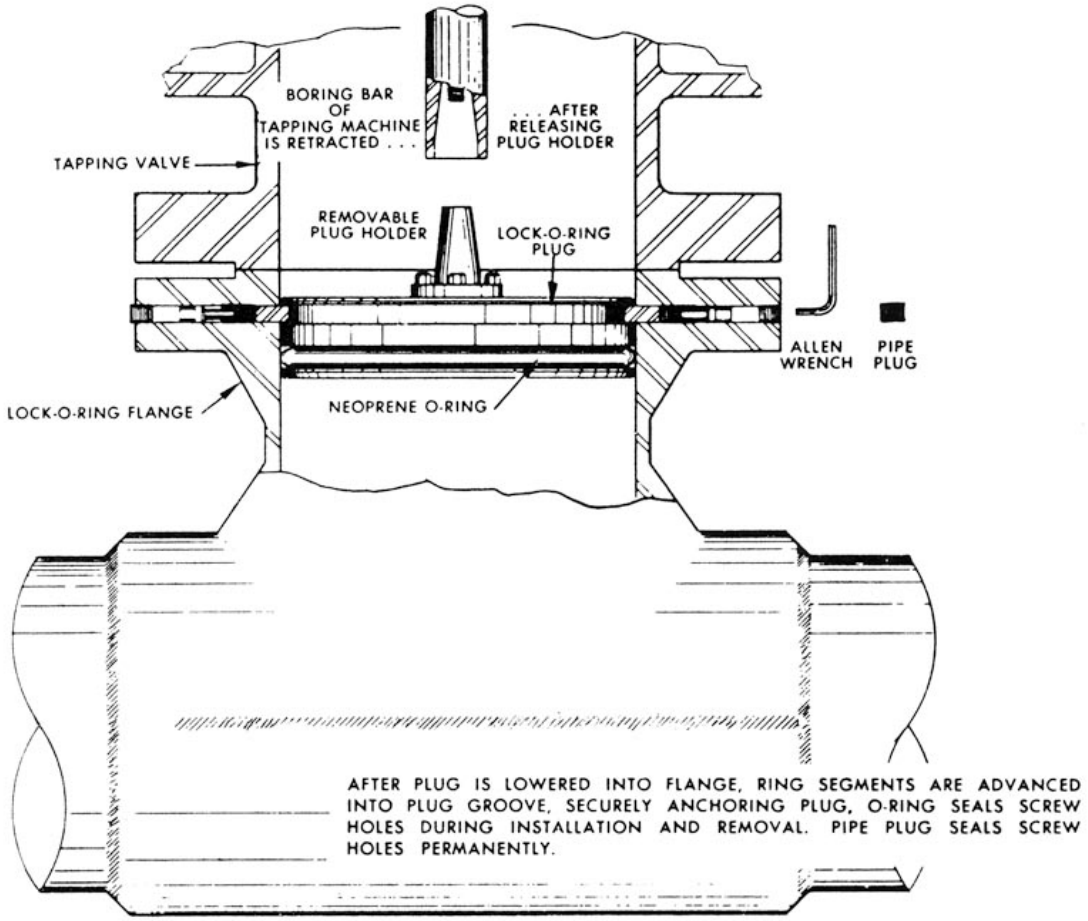

POWER STOP

Positive Sealing For Small Diameters
Power Stop is a popular and proven expanding stopper in sizes 3”, 4”,5” and 6”.

It is used by many gas utilities and water companies.

The positive seal provides two distinct advantages:

- The rubber seals expand 20mm in range and takes up ovality or build up within the pipeline.
- The mechanical special seal allows new sections of pipe to be pressure tested between the Stops.

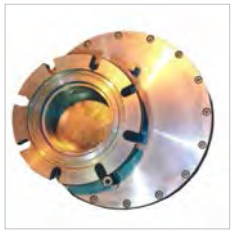

POWERSTOP EQUIPMENT

POWERSTOP EQUIPMENT

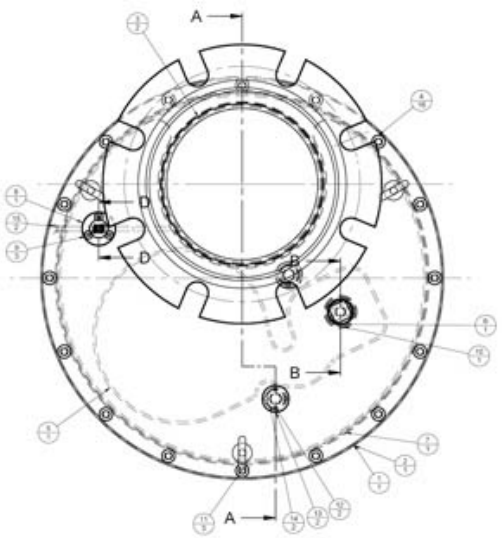

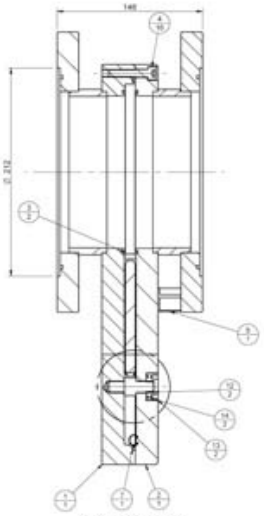
SECTION A-A

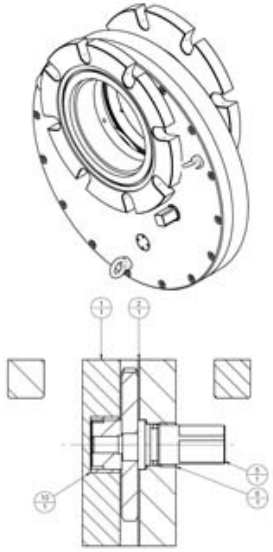
ENLARGED SECTION B-B

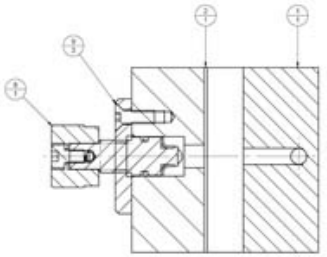
ENLARGED SECTION D-D

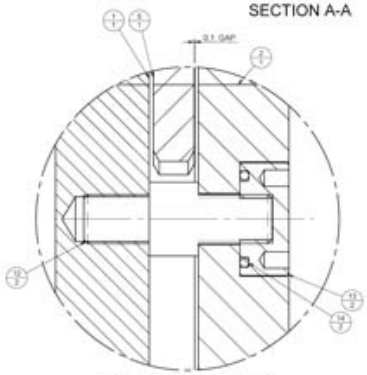
ENLARGED DETAIL C

6 INCH VALVE ASSEMBLY

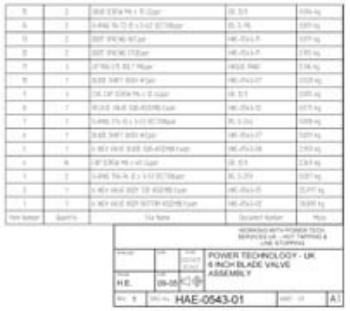

POWERSTOP EQUIPMENT

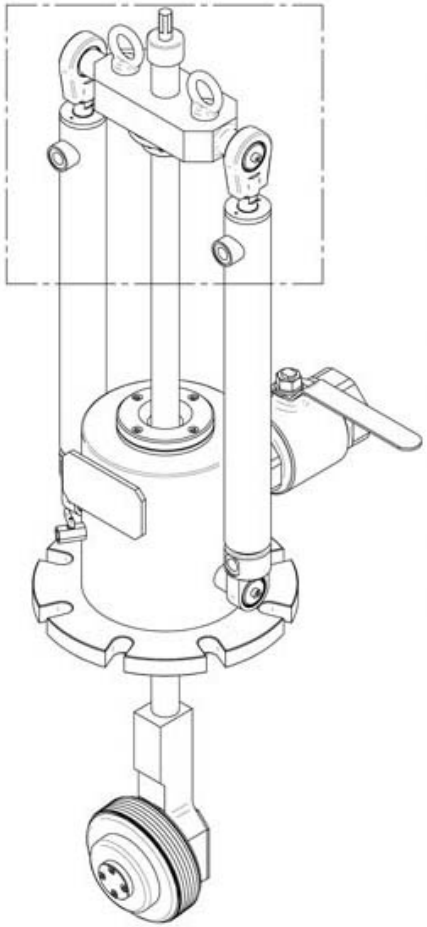

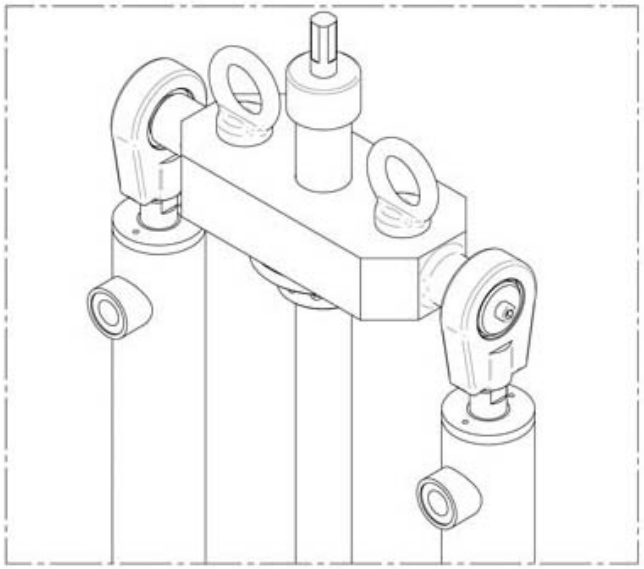

ENLARGED DETAIL A

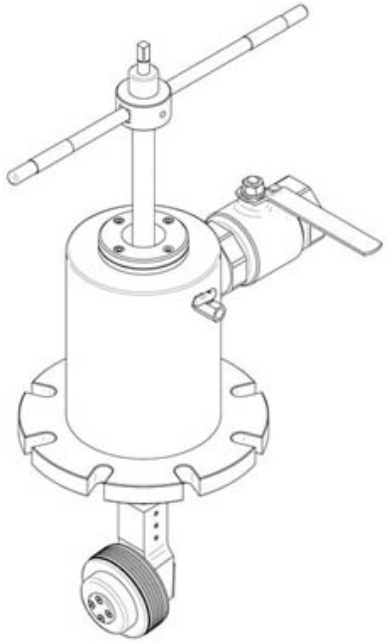

MK 1 - 6 INCH POWER STOP ASSEMBLY - ISO. VIEW

POWERSTOP EQUIPMENT

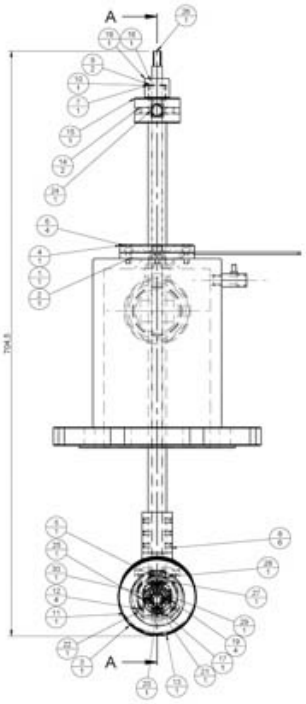

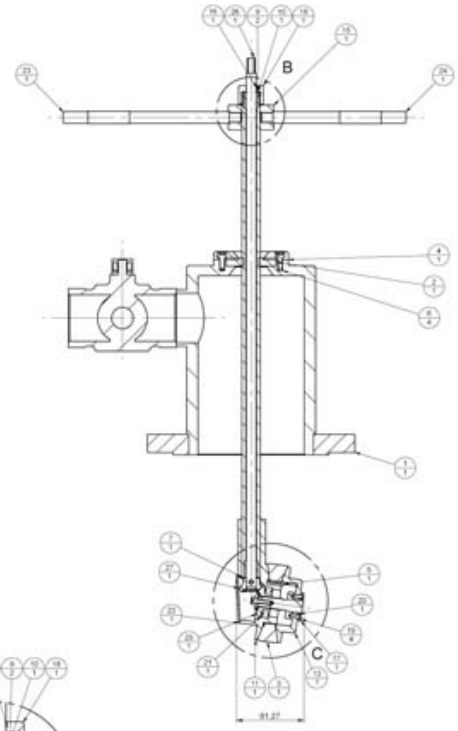

PAT SECTION A-A

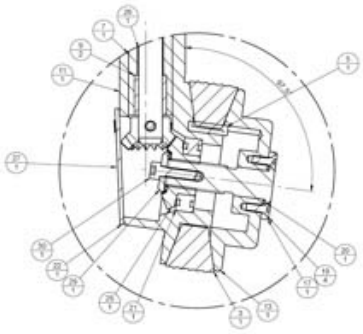

ENLARGED DETAIL C

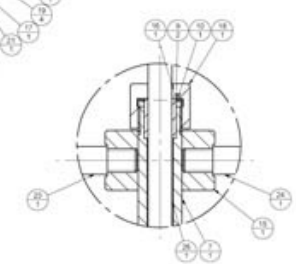

ENLARGED DETAIL B

MK 1 - 4 INCH LINE STOP ASSEMBLY

ASSEMBLY DIMENSIONS:

EXPANDING SEAL - SLACK DIA. = 92 mm
EXPANDING SEAL - COMP. RUBBER = 114 mm
FULL SET - MAX. TURNS = 10.5

POWER TECHNOLOGY SERVICES UK.

POWER TECHNOLOGY - UK
4 INCH LINE STOP
ASSEMBLY

HAE-0546-01

POWERSTOP EQUIPMENT

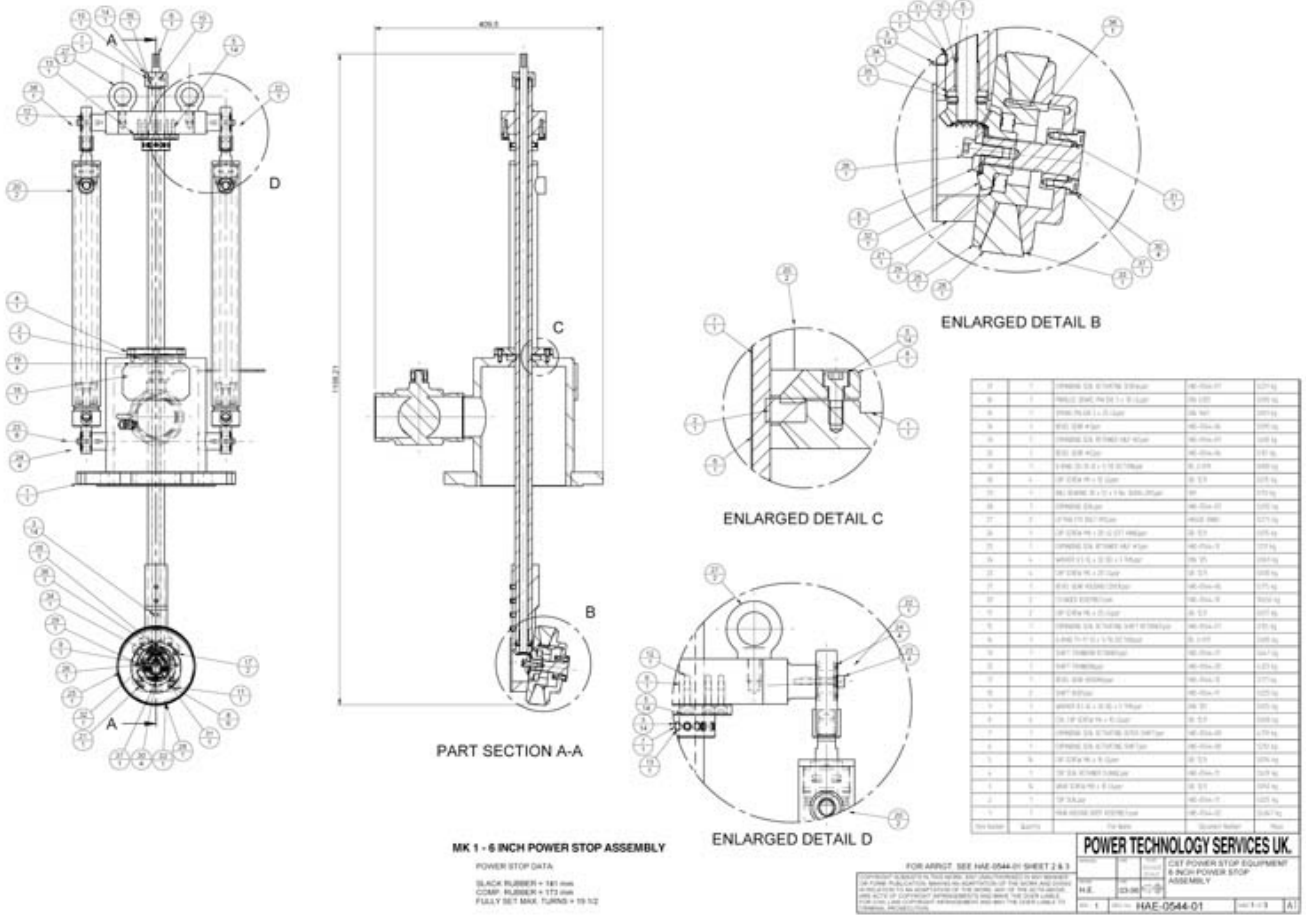

FABRICATED SPLIT TEES AND REPAIR CLAMPS

For hot tapping, pipeline plugging and repair application, these products are made to client specifications.

Full bore branch or reduced bore branch available, welded to ASME or British Standard Codes of practice, all plugging tees are fitted with completion plug facility, standard, scarfed nipples or bar type plugs on request when fittings are ordered.

48x48x48 CL150 Linestop fitting

24x24x24 CL150 Linestop fittings B31.4/8 spec

12x12x12 Special Muffler repair clamp

FORGED FITTINGS 2” THROUGH 48” DIAMETER

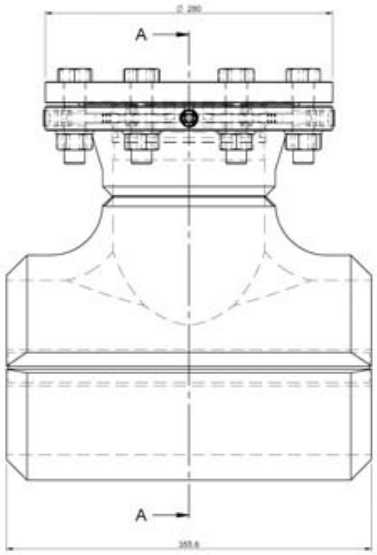

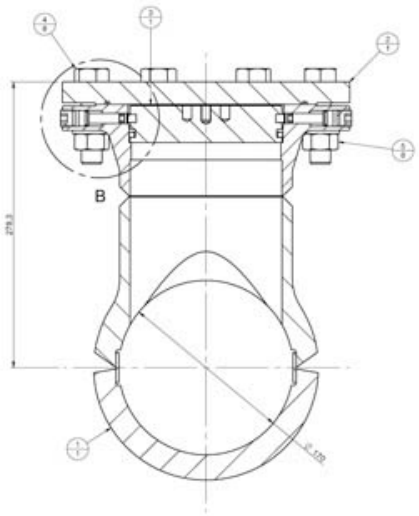

SECTION A-A

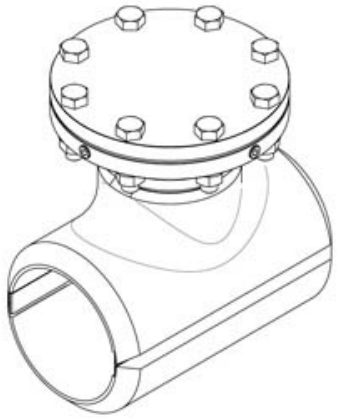

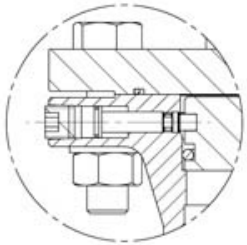

ENLARGED DETAIL B

MK 1 - 150 NS. POWER STOP TEE - CLASS 150 - ARRANGEMENT

Item Number	Quantity	File Name	Document Number	Part Number	Mass
5	8	HEX NUT M20 & FLAT WASHER.par	DR. 8		0.609 kg
4	8	HEX. BOLT M20 x 80 LG.par	DR. 8.8		2.204 kg
3	1	O-RING 190-09 ID x 3.53 SECTION.par	BS. 2-264		0.004 kg
2	1	150 NS. VALVE FLANGE COVER.par	HAE-0712-08		9.749 kg
1	1	150 NS. POWER STOP TEE - CLASS 150 - ASSEMBLY.asm	HAE-0712-02		33.474 kg

POWER TECHNOLOGY SERVICES UK.

POWER STOP EQUIPMENT
150 NS. POWER STOP TEE - CLASS 150 SEGMENTED SLIP-IN PLUG ARRANGEMENT

H.E. | 03-07 | 10000001 | HAE-0712-01 | A1

COPYRIGHT SUBSISTS IN THIS WORK AND UNAUTHORISED IN ANY MANNER OR FORM PUBLICATION, MAKING AN ADAPTATION OF THE WORK AND DOING IN RELATION TO AN ADAPTATION OF THE WORK ANY OF THE ACTS ABOVE, MAKES ACTS OF COPYRIGHT INFRINGEMENTS AND MAKE THE DOER LIABLE FOR CIVIL LAW COPYRIGHT INFRINGEMENT AND MAY THE DOER LIABLE TO CRIMINAL PROSECUTION.

FORGED FITTINGS 2” THROUGH 48” DIAMETER

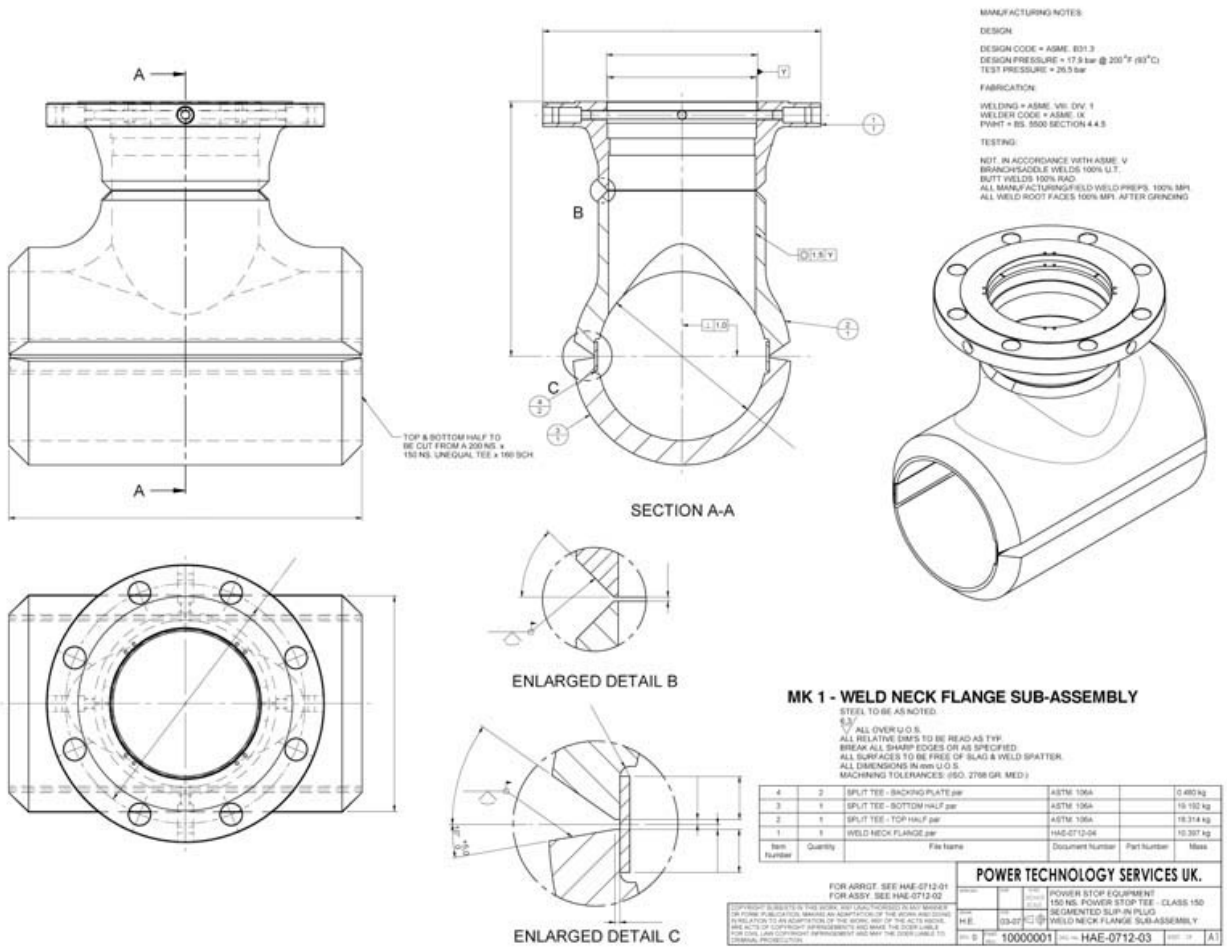

CLOSURE FLANGES 2” THROUGH 48” DIAMETER

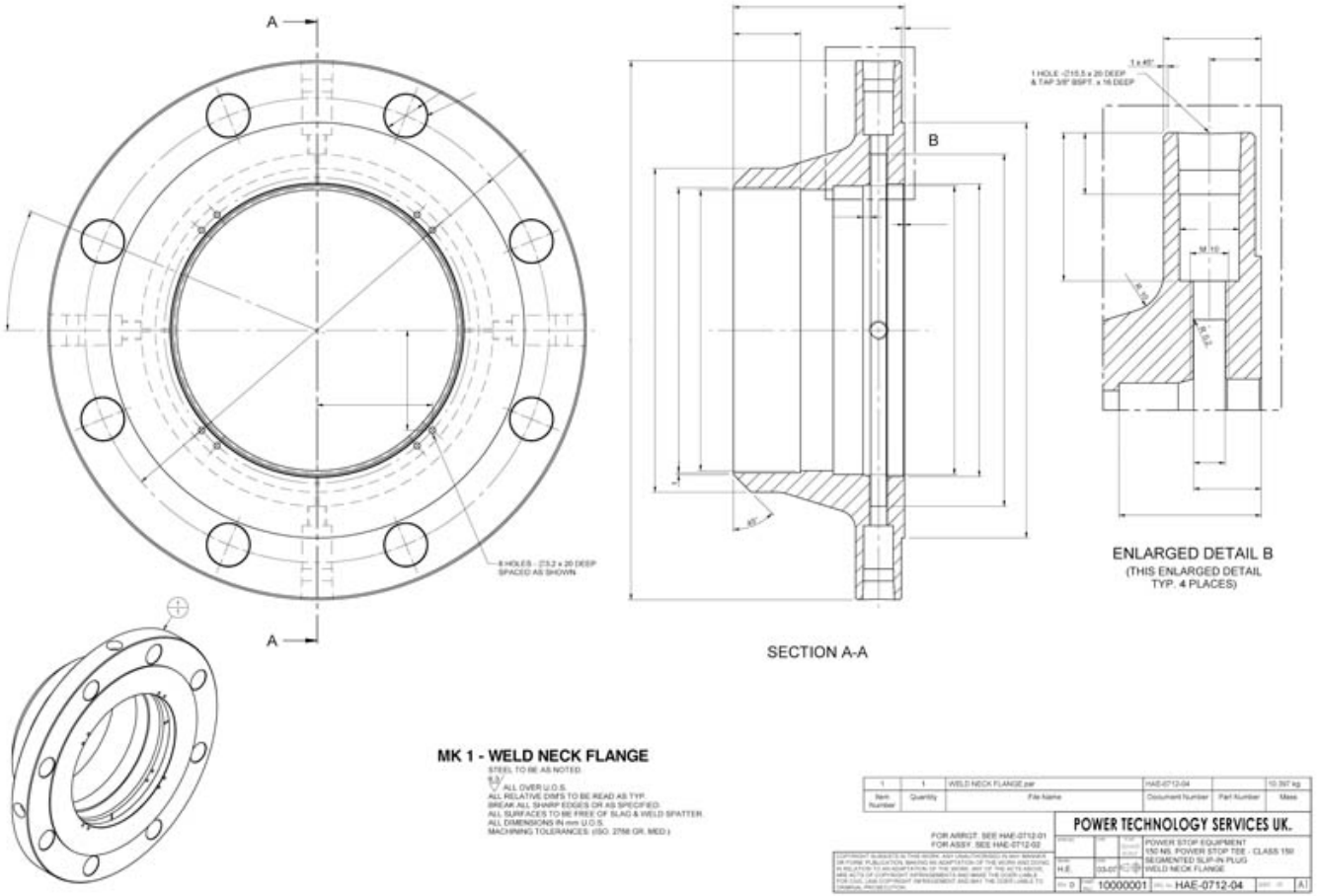

CLOSURE FLANGES 2” THROUGH 48” DIAMETER

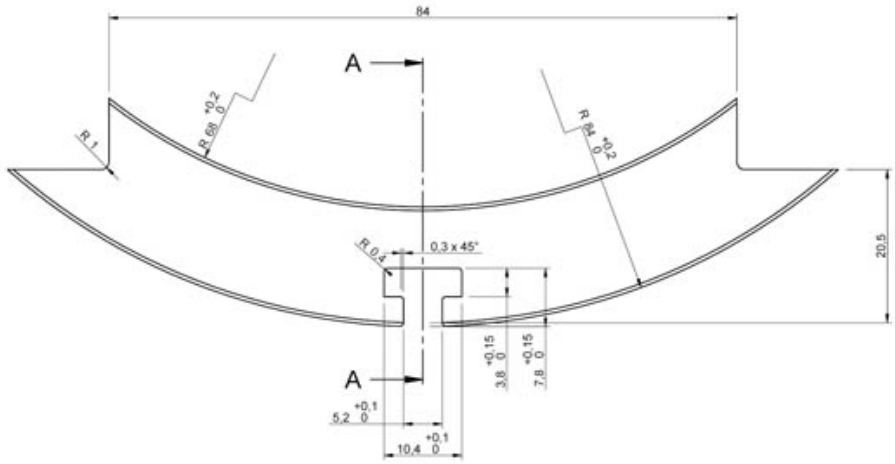

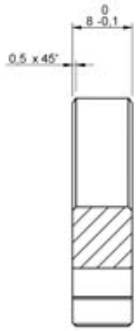

SECTION A-A

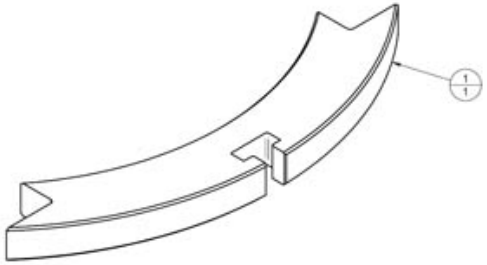

MK 3 - SEGMENT

STEEL TO SABS. 1431 GR. 300 WA.
3.2 ALL OVER U.O.S.
ALL RELATIVE DIM'S TO BE READ AS TYP.
BREAK ALL SHARP EDGES.

Item Number	Quantity	File Name	Document Number	Part Number	Mass
1	1	SEGMENT.par	HAE-0712-06		0.094 kg

FOR ARRGT. SEE HAE-0712-01
FOR ASSY. SEE HAE-0712-02

COPYRIGHT SUBSISTS IN THIS WORK. ANY UNAUTHORISED IN ANY MANNER OR FORM, PUBLICATION, MAKING AN ADAPTATION OF THE WORK AND DOING IN RELATION TO AN ADAPTATION OF THE WORK, ANY OF THE ACTS ABOVE, ARE ACTS OF COPYRIGHT INFRINGEMENTS AND MAKE THE DOER LIABLE FOR CIVIL LAW COPYRIGHT INFRINGEMENT AND MAY THE DOER LIABLE TO CRIMINAL PROSECUTION.

POWER TECHNOLOGY SERVICES UK.

APPROVED	DATE	DO NOT SCALE	POWER STOP EQUIPMENT 150 NS. POWER STOP TEE - CLASS 150 SEGMENTED SLIP-IN PLUG SEGMENT
DRAWN H.E.	DATE 03-07		
REV: 0	PART No's: 10000001	DWG. No. HAE-0712-06	SHEET OF A2

HOT TAP TEE FORGED FITTING

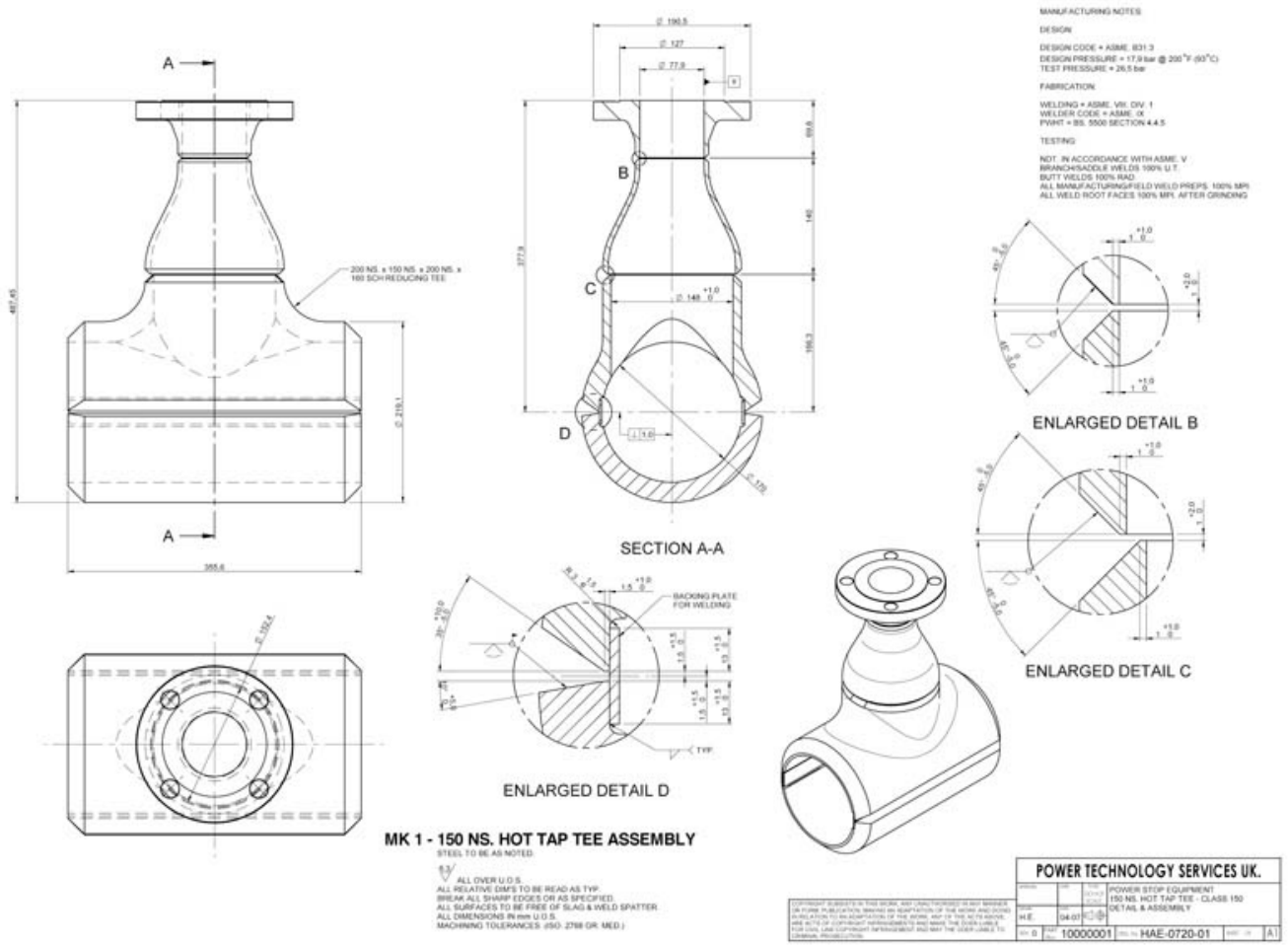

MK 1 - 150 NS. HOT TAP TEE ASSEMBLY

STEEL TO BE AS NOTED.

ALL OVER U.O.S.
ALL RELATIVE DIMS TO BE READ AS TYP.
BREAK ALL SHARP EDGES OR AS SPECIFIED.
ALL SURFACES TO BE FREE OF SLAG & WELD SPATTER.
ALL DIMENSIONS IN mm U.O.S.
MACHINING TOLERANCES: (ISO: 2768 GR. MED.)

POWER TECHNOLOGY SERVICES UK.			
		POWER STOP EQUIPMENT	
H.E	04-07	150 NS. HOT TAP TEE - CLASS 150 DETAIL & ASSEMBLY	
REV. 0	10000001	HAE-0720-01	A1

COPYRIGHT IS RESERVED IN THIS WORK AND UNAUTHORISED MAY INFRINGE UK COPYRIGHT PUBLICATION, MAKING AN ADAPTATION OF THE WORK AND DOING ANY RELATION TO AN ADAPTATION OF THE WORK, ARE ACTS OF COPYRIGHT INFRINGEMENTS AND MAKE THE DOER LIABLE FOR CIVIL LAW COPYRIGHT INFRINGEMENT AND MAY THE DOER LIABLE TO CRIMINAL PROSECUTION.

SIZE ON SIZE HOT TAP TEE FORGED FITTING

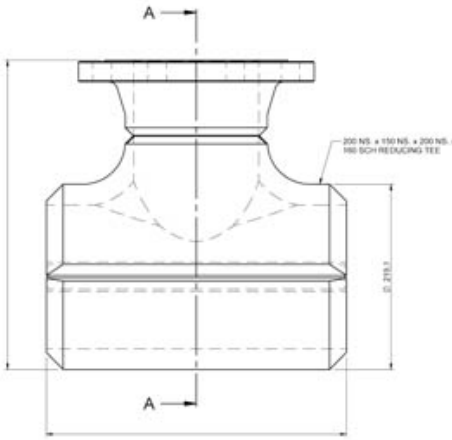

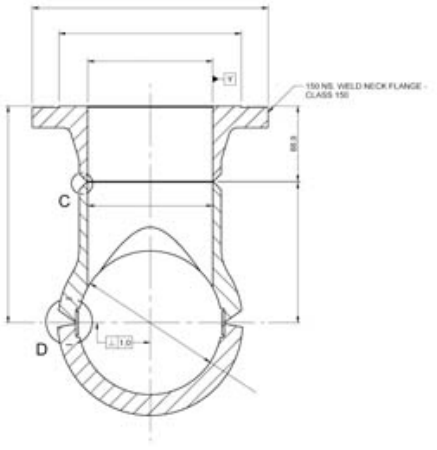

SECTION A-A

MANUFACTURING NOTES:

DESIGN:

DESIGN CODE = ASME B31.3
DESIGN PRESSURE = 17.9 bar @ 200 °F (93 °C)
TEST PRESSURE = 26.5 bar

FABRICATION:

WELDING = ASME, VIII, DIV. 1
WELDER CODE = ASME, IX
PWHT = BS. 5500 SECTION 4.4.5

TESTING:

NDT: IN ACCORDANCE WITH ASME, V
BRANCH/SADDLE WELDS 100% U.T.
BUTT WELDS 100% RAD.
ALL MANUFACTURING/FIELD WELD PREPS. 100% MPI.
ALL WELD ROOT FACES 100% MPI. AFTER GRINDING

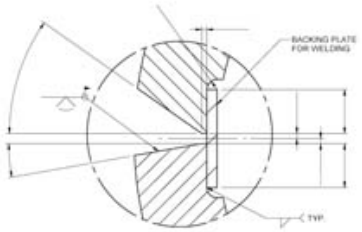

ENLARGED DETAIL D

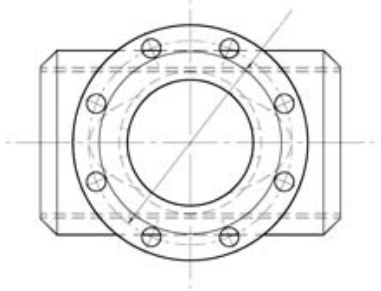

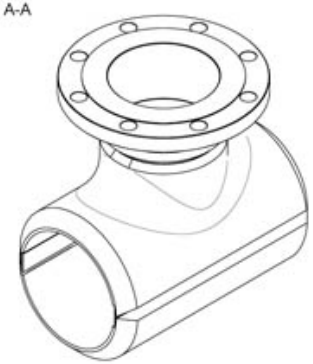

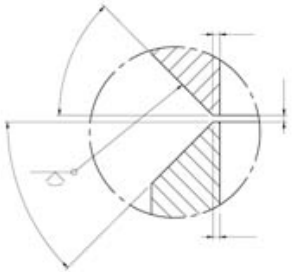

ENLARGED DETAIL C

MK 1 - 150 NS. HOT TAP TEE ASSEMBLY

STEEL TO BE AS NOTED.

ALL OVER U.O.S.
ALL RELATIVE DIM'S TO BE READ AS TYP.
BREAK ALL SHARP EDGES OR AS SPECIFIED.
ALL SURFACES TO BE FREE OF SLAG & WELD SPATTER.
ALL DIMENSIONS IN mm U.O.S.
MACHINING TOLERANCES (ISO. 2768 GR. MED.)

COPYRIGHT SUBSISTS IN THIS WORK AND UNAUTHORISED IN ANY MANNER WHATSOEVER PUBLICATION, MAKING AN ADAPTATION OF THE WORK AND DOING ANY ACT IN RELATION TO AN ADAPTATION OF THE WORK, ANY OF THE ACTS ABOVE MAY BE ACTS OF COPYRIGHT INFRINGEMENTS AND MAKE THE DOER LIABLE FOR CIVIL LAW COPYRIGHT INFRINGEMENT AND MAY THE DOER LIABLE TO CRIMINAL PROSECUTION

POWER TECHNOLOGY SERVICES UK.				
			POWER STOP EQUIPMENT 150 NS. HOT TAP TEE - CLASS 150 DETAIL & ASSEMBLY	
H.E.	04-07			
0	10000001	HAE-0726-01		A1

SCREW LOC FITTING COMPLETE WITH BRASS PLUGS CLASS 150/300/600/900

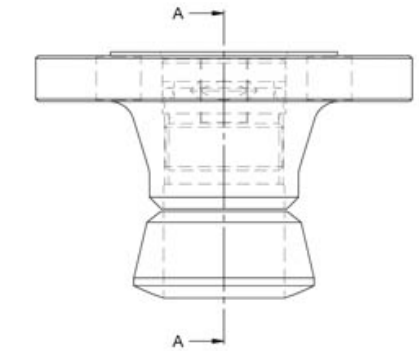

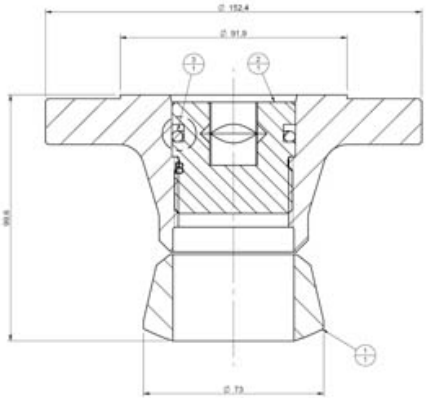

MANUFACTURING NOTES:

DESIGN

DESIGN CODE = ASME. B31.3
DESIGN PRESSURE = 17.9 bar @ 200°F (93°C)
TEST PRESSURE = 26.5 bar

FABRICATION

WELDING = ASME. VIII. DIV. 1
WELDER CODE = ASME. IX
PWHT = BS. 5500 SECTION 4.4.5

TESTING

NDT. IN ACCORDANCE WITH ASME. V
BRANCH/SADDLE WELDS 100% U.T.
BUTT WELDS 100% RAD.
ALL MANUFACTURING/FIELD WELD PREPS. 100% MPI.
ALL WELD ROOT FACES 100% MPI. AFTER GRINDING

SECTION A-A

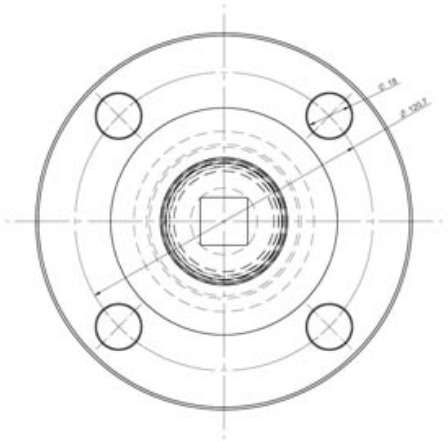

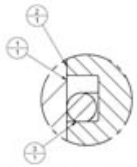

ENLARGED DETAIL B

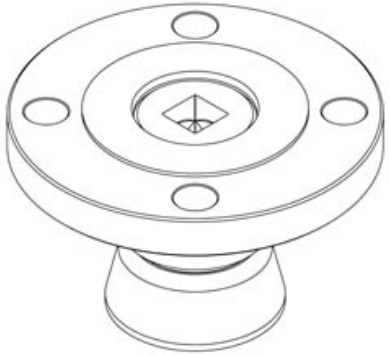

MK 1 - 50 NS. WELDOLET PLUG ASSEMBLY

STEEL TO BS. 970-080M40 (EN 8).

ALL OVER U.O.S.
ALL RELATIVE DIMS TO BE READ AS TYP.
BREAK ALL SHARP EDGES.

Item Number	Quantity	File Name	Document Number	Part Number	Mass
3	1	O-RING 40-94 ID x 5-33 SECTION par	BS. 2-326		0.002 kg
2	1	50 NS. PLUG.par	HAE-0727-03		0.531 kg
1	1	50 NS. WELD NECK FLANGE SUB-ASSEMBLY.asm	HAE-0727-02		3.295 kg

POWER TECHNOLOGY SERVICES UK.

POWER STOP EQUIPMENT
50 NS. WELDOLET PLUG FITTING
CLASS 150
ASSEMBLY

DRN: H.E. DATE: 04-07-12 SCALE: 1:2 SIZE: A1
DRG. NO. 10000001 REV. NO. HAE-0727-01 SHT. 1/1

COPYRIGHT SUBSISTS IN THIS WORK. ANY UNAUTHORISED IN ANY MANNER OR FORM, PUBLICATION, MAKING AN ADAPTATION OF THE WORK AND DOING IN RELATION TO AN ADAPTATION OF THE WORK ANY OF THE ACTS ABOVE, ARE ACTS OF COPYRIGHT INFRINGEMENTS AND MAKE THE DOER LIABLE FOR CIVIL LAW COPYRIGHT INFRINGEMENT AND MAY THE DOER LIABLE TO CRIMINAL PROSECUTION.

SCREW LOC FITTING COMPLETE WITH BRASS PLUGS CLASS 150/300/600/900

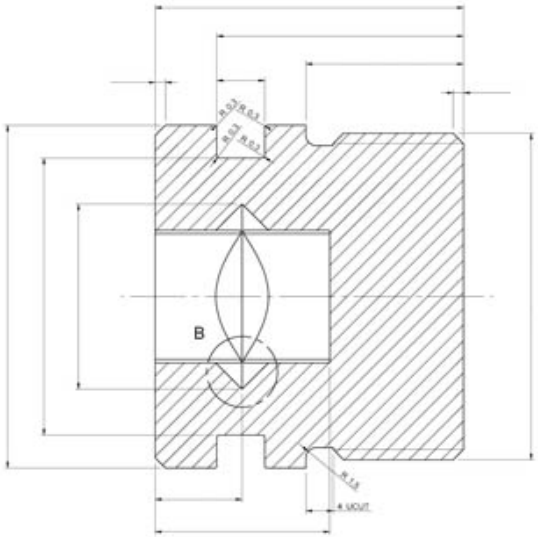

SECTION A-A

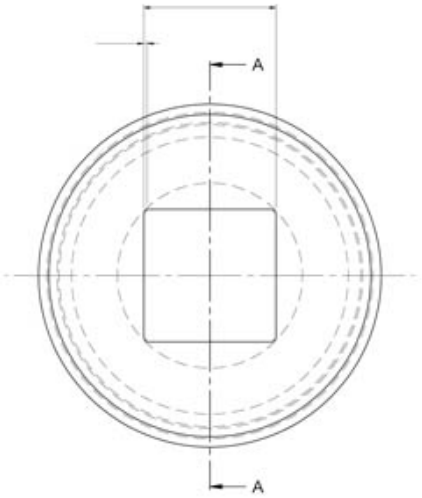

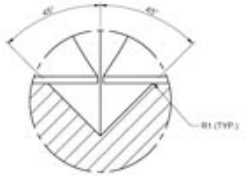

ENLARGED DETAIL B

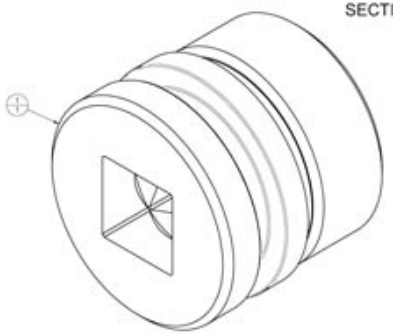

MK 2 - 50 NS. PLUG

MATL.: BRONZE TO BS. 1400 GR. PB1.

ALL OVER U.O.S.

ALL RELATIVE DIM'S TO BE READ AS TYP.

BREAK ALL SHARP EDGES

1	1	50 NS. PLUG.par	HAE-0727-03		0.531 kg
Item Number	Quantity	File Name	Document Number	Part Number	Mass

POWER TECHNOLOGY SERVICES UK.

FOR ASSY. SEE HAE-0727-01

POWER STOP EQUIPMENT
50 NS. WELDOLET PLUG FITTING
CLASS 150
50 NS. PLUG

H.E. 04-07

REV. B PART 10000001 DWG. No. HAE-0727-03 A1

COPYRIGHT SUBSISTS IN THIS WORK AND UNAUTHORISED PUBLICATION OR FURTHER PUBLICATION, MAKING AN ADAPTATION OF THE WORK AND DOING IN RELATION TO AN ADAPTATION OF THE WORK ANY OF THE ACTS ABOVE, ARE ACTS OF COPYRIGHT INFRINGEMENTS AND MAKE THE DOER LIABLE FOR CIVIL LAW COPYRIGHT INFRINGEMENT AND MAY THE DOER LIABLE TO CRIMINAL PROSECUTION.

SCREW LOC FITTING COMPLETE WITH BRASS PLUGS CLASS 150/300/600/900

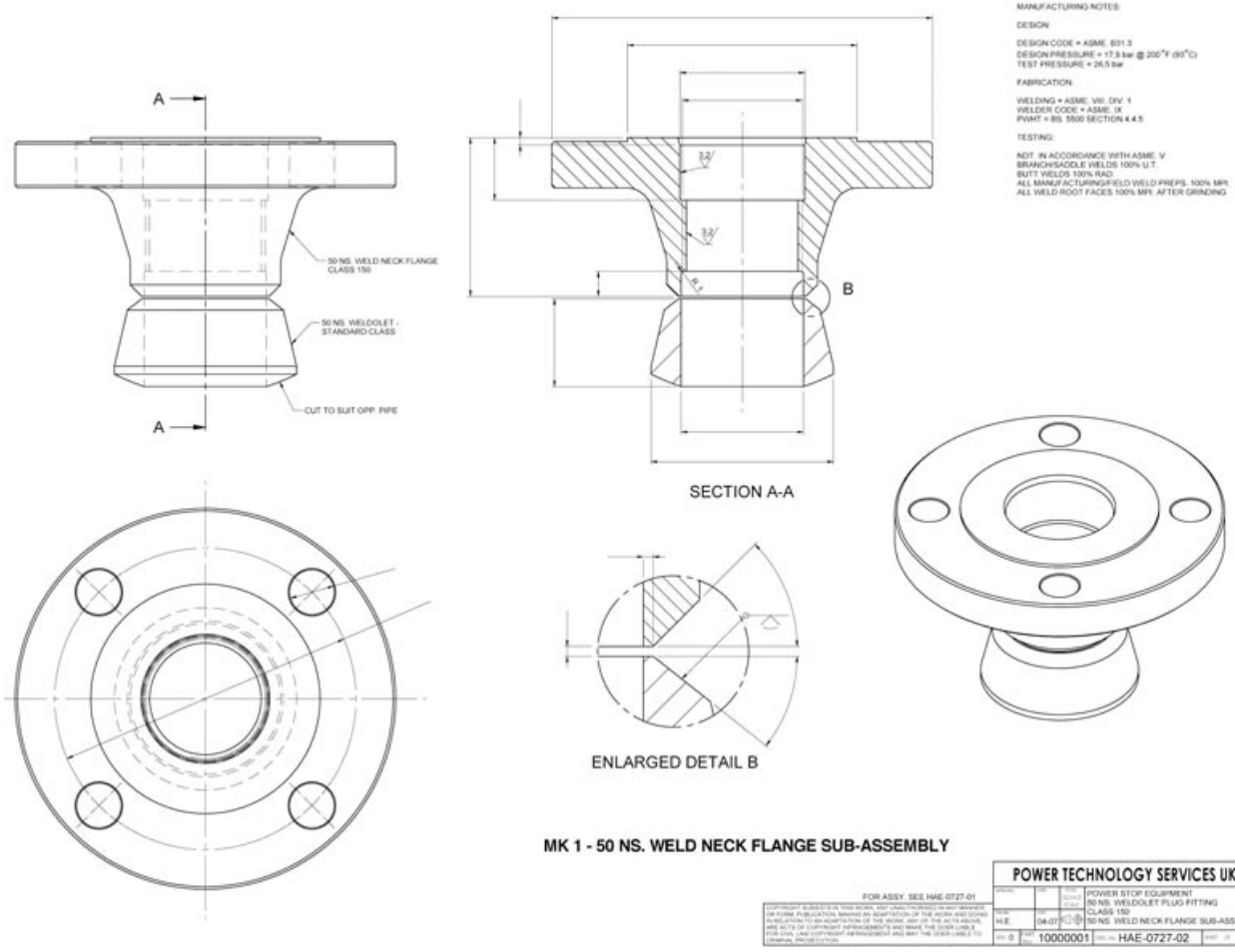

MK 1 - 50 NS. WELD NECK FLANGE SUB-ASSEMBLY

POWER TECHNOLOGY SERVICES UK.			
FOR ASSY. SEE HAE-0727-01		POWER STOP EQUIPMENT 50 NS. WELDOLET PLUG FITTING CLASS 150	
H.E.	04-07	50 NS. WELD NECK FLANGE SUB-ASSY.	
0	10000001	HAE-0727-02	A1

COPYRIGHT SUBSISTS IN THIS WORK. ANY UNAUTHORISED IN ANY MANNER OR FORM, PUBLICATION, MAKING AN ADAPTATION OF THE WORK AND DOING IN RELATION TO AN ADAPTATION OF THE WORK, ANY OF THE ACTS ABOVE, ARE ACTS OF COPYRIGHT INFRINGEMENTS AND MAKE THE DOER LIABLE FOR CIVIL AND COPYRIGHT INFRINGEMENT AND MAY THE DOER LIABLE TO CRIMINAL PROSECUTION.

CUTTERS

Power fabrication shops, manufacture and develop cutters and pilot drills in the UK. All sizes from 2” through to 60” diameter on standard cutters and linestop cutters. All compatible with existing equipment. Tipping can be in either H.S.S or Tungsten.

Inset shows a fabricated cutter in its raw state, the gullets are already shaped and the cutter is ready for heat treatment.

Inset shows the cutter being machined to is correct size, the gullets will then have the tip seats machined for the tips to be seated.

Insert shows the cutter completed, tips inserted by a brazing method and a pilot drill complete with holder.

LINE PLUGGING HEADS

- Maximum working pressure 1000 psig.
- All heads fabricated construction using certified materials and ASME or British Standard Codes of Practice.
- Pressure tested to 1.5 x maximum working pressure.
- Available to suit all pipe schedules.
- Elements ground to size, available at short notice.

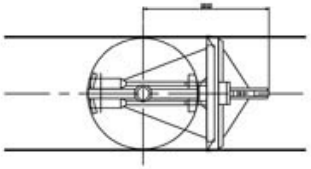

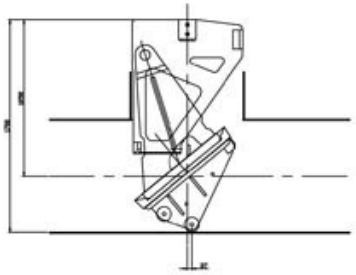

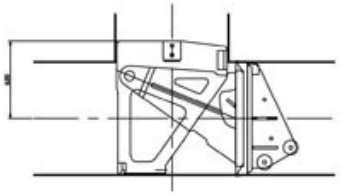

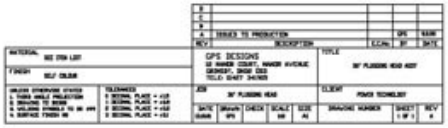

LINESTOP ELEMENTS

- Supplied ready drilled and ground to size or drilled and unground depending upon customers requirements.
- Available in sizes 4” through 60”
- Standard material nitrile. Other materials available on request.
- Reinforced for high pressure applications.

LINESTOP PLUGGING HOUSINGS

- To be used in conjunction with Power Plugging Heads and Actuators.
- To suit ANSI 150 and 600 flanges.
- Compatible with Power actuators and heads.
- Complete with equalisation and purge points.
- Fitted with eyebolt at balance point to assist assembly to actuator
- Manufactured to ASME or British Standard Codes of Practice
- Constructed to ensure concentricity and parallel faces.
- Available sizes 4” through to 60”.

SANDWICH VALVES

- Available in sizes 4” to 60” inch.
- 18 inch upwards are hydraulically operated using tapping machine power pack.
- Manufacture to suit ANSI 150, 300 and 600 flanges.
- All valves fitted with external pressure equalisation.
- Tested to 1.5 times maximum working pressure.

Features:

- Reduced face to face dimensions over standard valves.
- Oversize bore to facilitate exact alignment and completion plug setting.
- Socket head high tensile cap Screws used for easy service and strip down also ensures concentricity for plugging applications.
- Compatible with all equipment.

SANDWICH VALVES

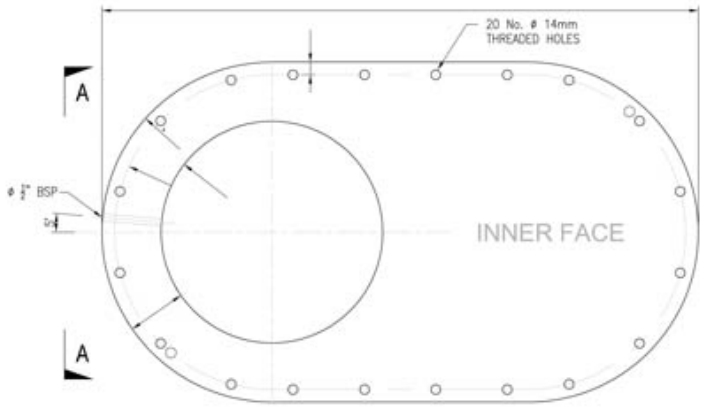

NOTE: 2 No. OUTER PLATES REQUIRED.

NOTES

THIRD ANGLE PROJECTION.
ALL SURFACES FREE FROM SLAG AND WELD SPLATTER.
ALL DIMENSIONS IN MM UNLESS OTHERWISE STATED.

GENERAL TOLERANCE
FINISH = ✓
00.00 = ±0.25MM
00.0 = ±0.50MM
00 = ±1.0MM
ANGULAR = ±1°

MATERIAL:

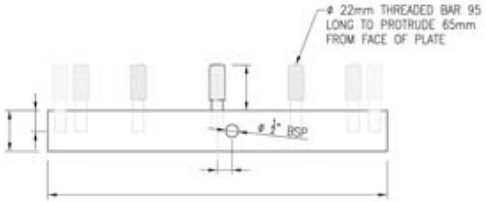

ELEVATION A–A
SCALE 1:5

PLAN VIEWS
SCALE 1:5

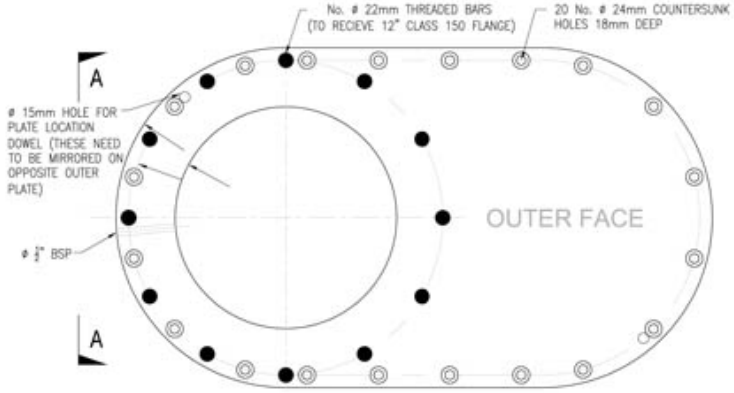

REV	DATE	AMENDMENT	DRAWN BY	CHECKED BY

POWER
TECHNOLOGY SERVICES LIMITED

Sixth Avenue
Flixborough Industrial Estate
Flixborough
Scunthorpe
DN15 8SH

Telephone: 01724 282 500
Fax 01724 282 064
Email: enquiries@powertechservices.co.uk
Website:www.powertechservices.co.uk

CLIENT

TITLE
12" SANDWICH VALVE
OUTER PLATE

DRAWN BY	DATE
CH	NOV 2005

SCALE	DRAWING No	REV
AS SHOWN		-

SANDWICH VALVES

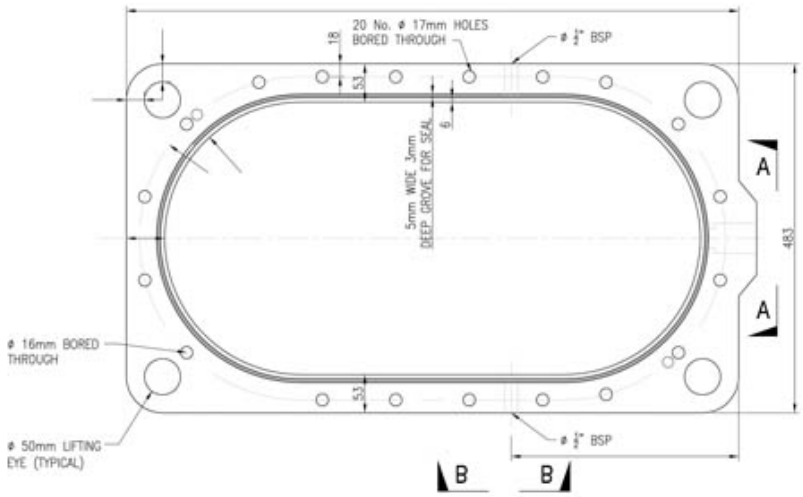

PLAN
SCALE 1:5

NOTES

THIRD ANGLE PROJECTION.
ALL SURFACES FREE FROM SLAG AND WELD SPLATTER.
ALL DIMENSIONS IN MM UNLESS OTHERWISE STATED.

GENERAL TOLERANCE
FINISH = ▽
00.00 = ±0.25MM
00.0 = ±0.50MM
00 = ±1.0MM
ANGULAR = ±1°

MATERIAL:

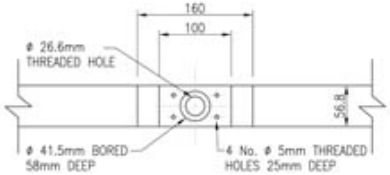

ELEVATION A–A
SCALE 1:5

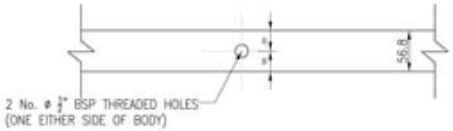

ELEVATION B–B
SCALE 1:5

REV	DATE	AMENDMENT	DRAWN BY	CHECKED BY

POWER
TECHNOLOGY SERVICES LIMITED

Sixth Avenue
Flixborough Industrial Estate
Flixborough
Scunthorpe
DN15 8SR

Telephone: 01724 282 500
Fax: 01724 282 064
Email: enquiries@powertechservices.co.uk
Website: www.powertechservices.co.uk

CLIENT

TITLE
12" SANDWICH VALVE
CENTRAL SECTION

DRAWN BY	DATE
CH	NOV 2005

SCALE	DRAWING No.	REV
AS SHOWN		-

SANDWICH VALVES

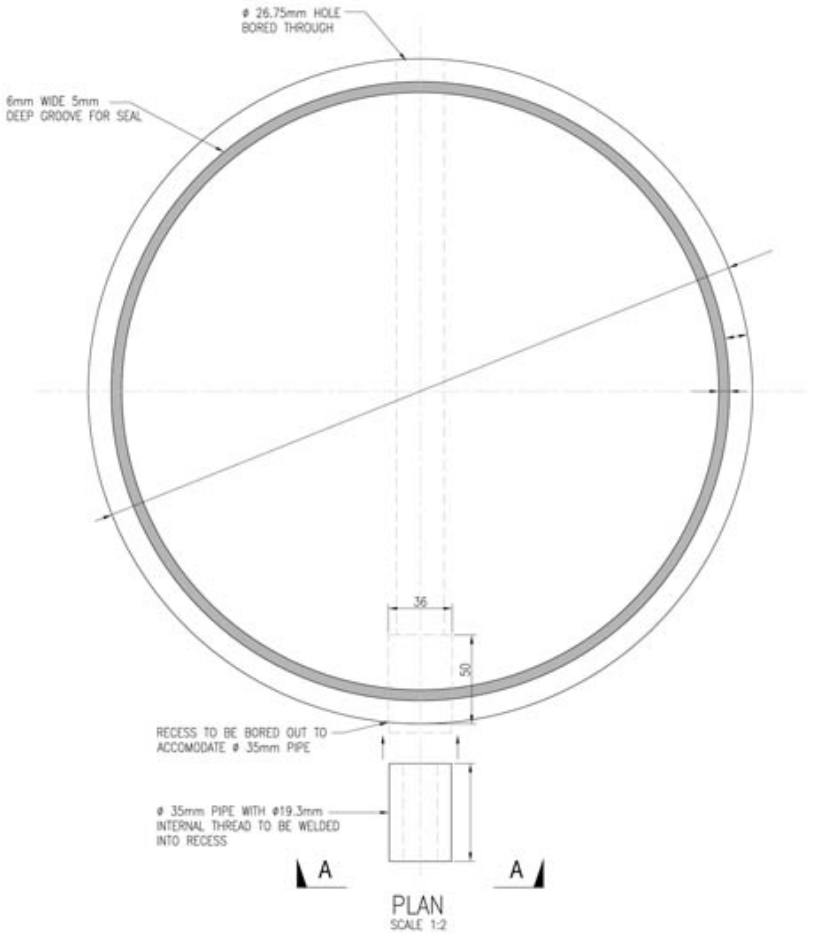

NOTES

THIRD ANGLE PROJECTION.
ALL SURFACES FREE FROM SLAG AND WELD SPLATTER.
ALL DIMENSIONS IN MM UNLESS OTHERWISE STATED.

GENERAL TOLERANCE		
FINISH	=	√
00.00	=	±0.25MM
00.0	=	±0.50MM
00	=	±1.0MM
ANGULAR	=	±1°

MATERIAL:

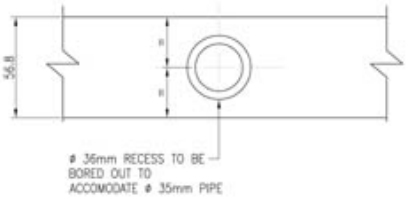

ELEVATION A–A
SCALE 1:2

REV	DATE	AMENDMENT	DRAWN BY	CHECKED BY

POWER
TECHNOLOGY SERVICES LIMITED

Sixth Avenue
Flixborough Industrial Estate
Flixborough
Scunthorpe
DN15 8SH

Telephone: 01724 282 500
Fax: 01724 282 564
Email: enquiries@powertechservices.co.uk
Website: www.powertechservices.co.uk

CLIENT

TITLE
12" SANDWICH VALVE GATE

DRAWN BY	DATE
CH	NOV 2005

SCALE	DRAWING No	REV
AS SHOWN		-

SANDWICH VALVES

NOTES

THIRD ANGLE PROJECTION.
ALL SURFACES FREE FROM SLAG AND WELD SPLATTER.
ALL DIMENSIONS IN MM UNLESS OTHERWISE STATED.

GENERAL TOLREANCE

FINISH	=	
00.00	=	±0.25MM
00.0	=	±0.50MM
00	=	±1.0MM
ANGULAR	=	±1°

MATERIAL:

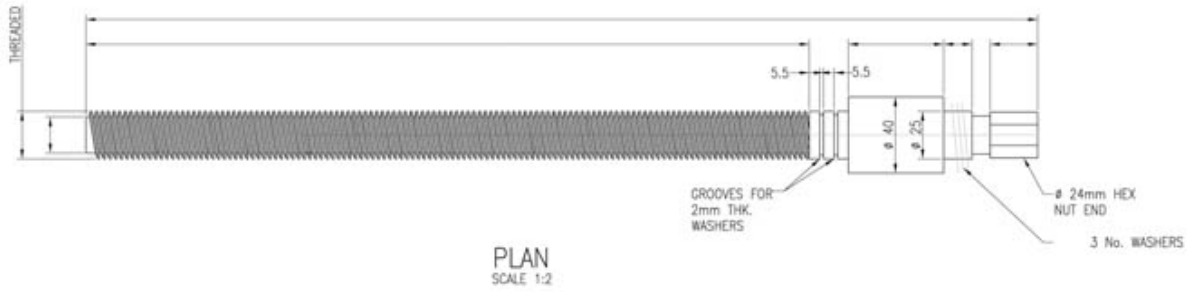

PLAN
SCALE 1:2

REV	DATE	AMENDMENT	DRAWN BY	CHECKED BY

POWER
TECHNOLOGY SERVICES LIMITED

Sixth Avenue
Flixborough Industrial Estate
Flixborough
Scunthorpe
DN15 8SH

Telephone: 01724 282 500
Fax: 01724 282 064
Email: enquiries@powertechservices.co.uk
Website: www.powertechservices.co.uk

CLIENT

TITLE
12" SANDWICH VALVE
GATE SCREW

DRAWN BY	DATE
CH	NOV 2005

SCALE	DRAWING No	REV
AS SHOWN		-

HYDRAULIC LINESTOP ACTUATORS AND JACKSCREWS

System comprises – Actuator, Plugging Valve, Housing, Plugging Cutter and Head.

Actuator information:

- Jackscrew operated 3 inch through 12 inch (optional 18 inch)
- Hydraulically operated 4 inch through 12 inch.
- Hydraulically operated 14 inch through 20 inch.
- Hydraulically operated 22 inch through 36 inch.
- Hydraulically operated 42 inch through 60 inch.
- Hydraulic actuators operated by tapping machine power pack.
- Control Bar Clamps incorporated for extra safety.
- Travel position indicator provided on hydraulic models.
- Pressure relief facility protects against inadvertent damage.
- Compatible with all equipment.

HYDRAULIC LINESTOP ACTUATORS AND JACKSCREWS

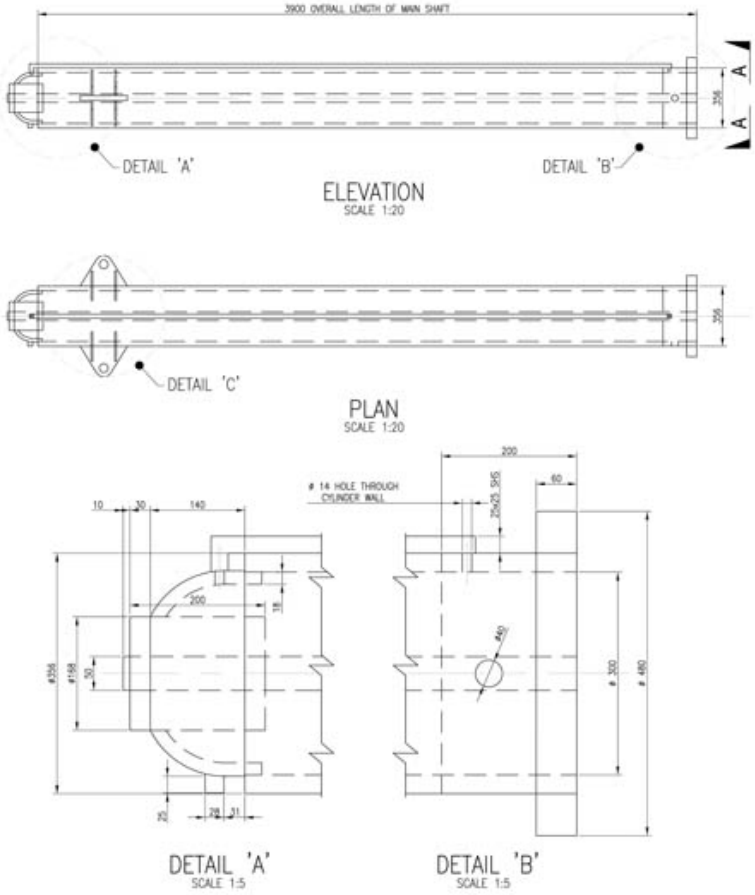

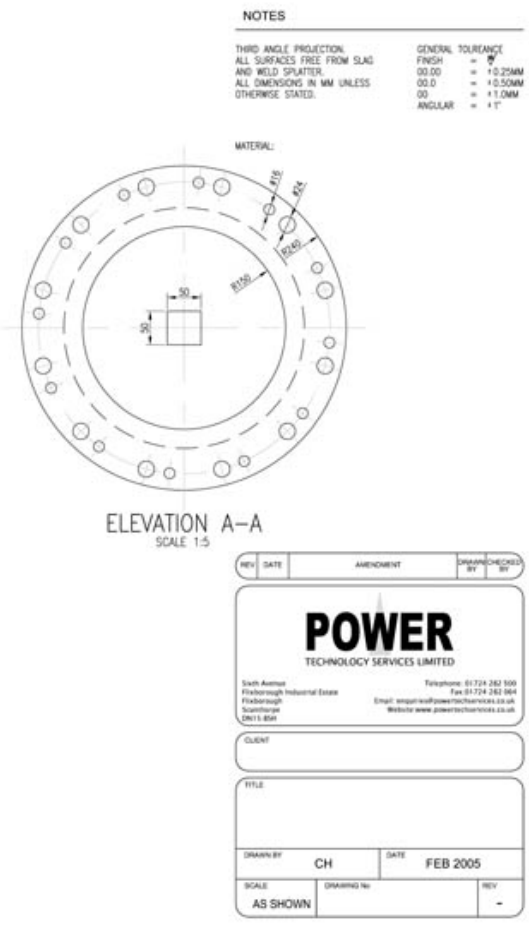

DRILLING MACHINE POWER PACKS

- Supplied with petrol or diesel engine.
- Skid mounted for safe transportation. Alternative trailer units available.
- Variable displacement pump.
- 40 gallon hydraulic tank.
- Replaceable filter element.
- Built-in relief valve.
- Supplied complete with flow, return and bypass hoses fitted with couplings.
- Hose reels available as extras.
- Manual start standard, auto-start built in
- Manufactured in the UK
- Compatible with all equipment.

DRILLING MACHINES RANGE

Model	Weight	Per Auto Revolution inch	Manual Advance	Operating Pressure	Operating Temp	Boring Bar Travel	Factory Tested	Maximum Temp	Drive	Higher Temps refer to Factory
PTS 6/18 range ½" to 6"	8kgs	Hand Feed 0" to ⅛"	Yes	1480 psig @ 100ºF	100ºF	18" adjustable by hand	2175 psig @amb	700ºF@ 700psig	Manual Air or Hydraulic	Yes
PTS 6/22 range ½" to 6"	16kgs	Hand Feed 0" to ⅛"	Yes	1480 psig @ 100ºF	100ºF	22" adjustable by hand	2175 psig @amb	700ºF@ 700psig	Manual Air or Hydraulic	Yes
PTS 6/24 range ½" to 6"	18kgs	Hand Feed 0" to ⅛"	Yes	1480 psig @ 100ºF	100ºF	24" adjustable by hand	2175 psig @amb	700ºF@ 700psig	Manual Air or Hydraulic	Yes
PTS 8/24 range 2" to 8"	480kgs	0.005" Optional 0.003"	Yes	1480 psig @ 100ºF	100ºF	24" adjustable by hand	2175 psig @amb	700ºF@ 700psig	Air or Hydraulic	Yes
PTS 12/42 range 3" to 12"	530kgs	0.006" Optional 0.003"	Yes	1480 psig @ 100ºF	100ºF	42" adjustable by hand	2175 psig @amb	700ºF@ 700psig	Air or Hydraulic	Yes
PTS 12/66 range 3" to 12"	590kgs	0.006" Optional 0.003"	Yes	1480 psig @ 100ºF	100ºF	66" adjustable by hand	2175 psig @amb	700ºF@ 700psig	Air or Hydraulic	Yes
PTS 24/42 range 3" to 24"	610kgs	0.006" Optional 0.003"	Yes	1480 psig @ 100ºF	100ºF	42" adjustable by hand	2175 psig @amb	700ºF@ 700psig	Air or Hydraulic	Yes
PTS 24/66 range 3" to 24"	650kgs	0.006" Optional 0.003"	Yes	1480 psig @ 100ºF	100ºF	66" adjustable by hand	2175 psig @amb	700ºF@ 700psig	Air or Hydraulic	Yes
PTS 36/80 range 12" to 36"	1115kgs	0.005"	Yes	1480 psig @ 100ºF	100ºF	80" adjustable by hand	2175 psig @amb	700ºF@ 700psig	Hydraulic Only	Yes
PTS 96/100 range 12" to 96"	3000kgs	0.005"	Yes	1480 psig @ 100ºF	100ºF	100" adjustable by hand	2175 psig @amb	700ºF@ 700psig	Hydraulic Only	Yes
PTS 96/120 range 12" to 96"	3300kgs	0.005"	Yes	1480 psig @ 100ºF	100ºF	120" adjustable by hand	2175 psig @amb	700ºF@ 700psig	Hydraulic Only	Yes
Power unit for all ranges	1100kgs	N/A	N/A	1500 psig	N/A	N/A	N/A	N/A	Diesel Electric Start	N/A
PTS 96/130 range 12" to 96"	3480kgs	0.005"	Yes	1480 psig @ 100ºF	100ºF	130" adjustable by hand	2175 psig @amb	700ºF@ 700psig	Hydraulic Only	Yes
PTS 36/100 range 12" to 36"	1200kgs	0.005"	Yes	1480 psig @ 100ºF	100ºF	100" adjustable by hand	2175 psig @amb	700ºF@ 700psig	Hydraulic Only	Yes

TAPPING MACHINES

Power have developed a full range of drilling machines which are compatible with others on the market, these machines have been tried and tested over the last 12 years.

Features

PTS: 6/18 .PTS: 6/22 .PTS: 6/24

- Tap into any pipeline system without shut down with the PTS Drilling machine.
- Solid drills ranging from 1/2" to 1-7/16" (12mm – 36mm) are handled with ease.
- The PTS 6/18 is manually or air operated there is also a hydraulic version.
- Cutters from 3"- 6" are Steel Bodied multi tooth cutters either in H.S.S or Tungsten.
- Each machine in enclosed in a carrying case for long lasting protection.
- Features on the PTS6/18 includes ratchet crank handle and small hand tools and is complete with cutter holders and adaptors.

Specifications

- Maximum working pressure: 1440 psi at 100of (100 Bars at 38oc)
- Maximum operating temperature: 500of at 700 psi (260oc at 50 Bars)
- Boring bar travel: 18" (485mm) or 24" (610mm)
- Machine only weight 15 kg
- Rate of travel: 0" to 1/8" per revolution
- Drills, Hole saws, Hole saw holders,

Threaded valve adaptors, Flanged adaptors, available from 1/2" through 6" all ratings.

UNDERPRESSURE DRILLING MACHINES

Model PTS: 6/24

- Available with either 24 inch or 32 inch reach.
- Air or hydraulic versions available.
- Maximum operating temp 700of at 700 psig.
- Complete with toolbox and ancillary tooling.
- Suitable for taps 2 inch through 6 inch diameter.
- Maximum working pressure 1440 psig at 100of.
- Tested to 2175 psig.
- Full range of adaptors, cutters and pilot drills available.

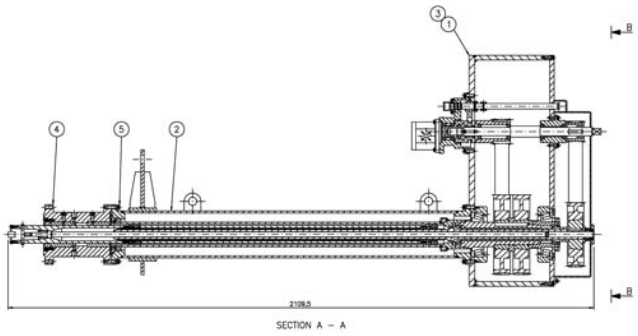

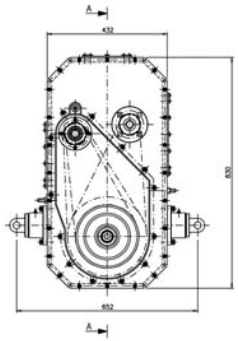

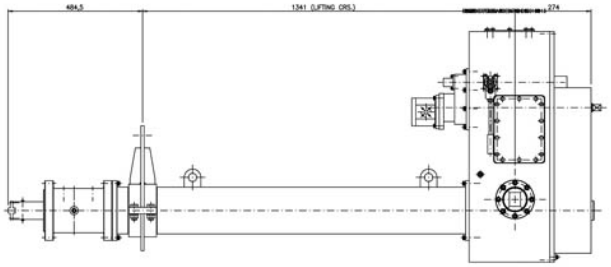

TAPPING MACHINE – SIZE 12/42 – GENERAL ARRANGEMENT

ITEM	REQD	DESCRIPTION	DRG No. – REMARKS
5	12	CAP SCREW M10 x 45 LG.	GR. 12.9
4	1	END KNOCKING ASSEMBLY	PTS-12-42-07
3	1	POST ASSEMBLED GEARBOX ARRANGEMENT	PTS-12-42-06
2	1	DRIVE TUBE ARRANGEMENT	PTS-12-42-04
1	1	GEARBOX ARRANGEMENT	PTS-12-42-02

DESIGN & DRAUGHTING CONSULTANTS cc.
POWER TECHNOLOGY SERVICES
TAPPING MACHINE
SIZE – DIA. 12/42
GENERAL ARRANGEMENT
PTS-12-42-01
SHEET 1 OF 1 A1

UNDERPRESSURE DRILLING MACHINES

Models PTS: 1242 – PTS: 1266 – PTS: 1742
Available with either 42 inch (PTS 1242) or 66 inch (PTS 1266) reach. Optional special machine Model PTS 2442 with a reach of 42 inch which can complete taps up to 24 inch diameter / or model PTS: 2466 which gives a reach of 66 inches.

Suitable for hot taps size ranges:

- PTS 1242 3 inch - 12 inch
- PTS 2442 3 inch - 24 inch (travel 42 inch)
- PTS 1266 3 inch - 12 inch
- PTS 2466 3 inch ≷ 24 inch (travel 66 inch)

- Air or hydraulic versions available
- Maximum working pressure 1440 psig at 100of
- Maximum operating temp 700of at 700 psig.
- Tested to 2175 psig.
- Complete with tool box and ancillary tooling.
- Full range of adaptors, cutter and pilot drills available.

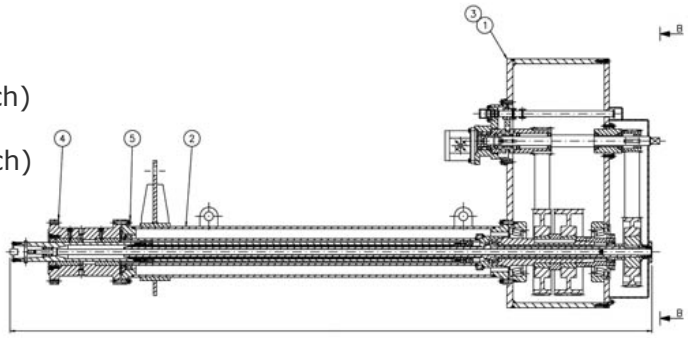

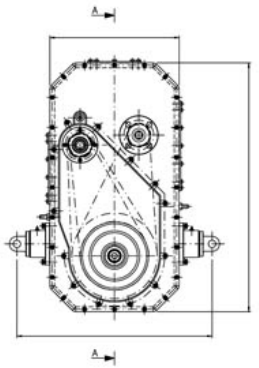

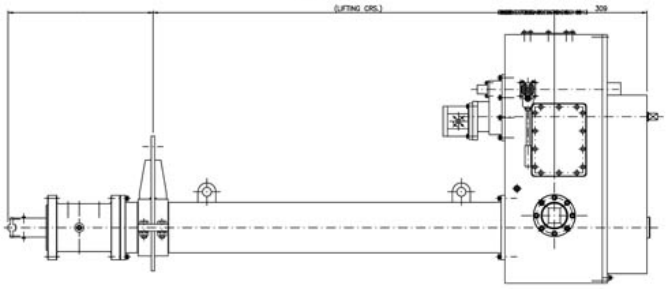

TAPPING MACHINE – SIZE 17/42 – GENERAL ARRANGEMENT

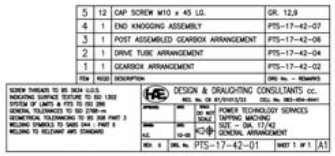

UNDERPRESSURE DRILLING MACHINES

Model PTS: 3680

- Large diameter drilling machine with 80 inch reach. Optional 100 inch reach
- Suitable for taps 12 inch through 36 inch diameter.
- Hydraulically powered advanced or retract boring bar or manual operation can Be used.
- Variable rotational speed ranges gives extreme flexibility for all cutting applications.
- Maximum working pressure 1440 psig at 100of.
- Maximum operating temperature 700of at 700 psig.
- Tested to 2175 psig.
- Supplied with fixed ladder and integral tool box and ancillary tools.
- Full range of adaptors, cutters and pilot drills available.

UNDERPRESSURE DRILLING MACHINES

Model PTS: 3680

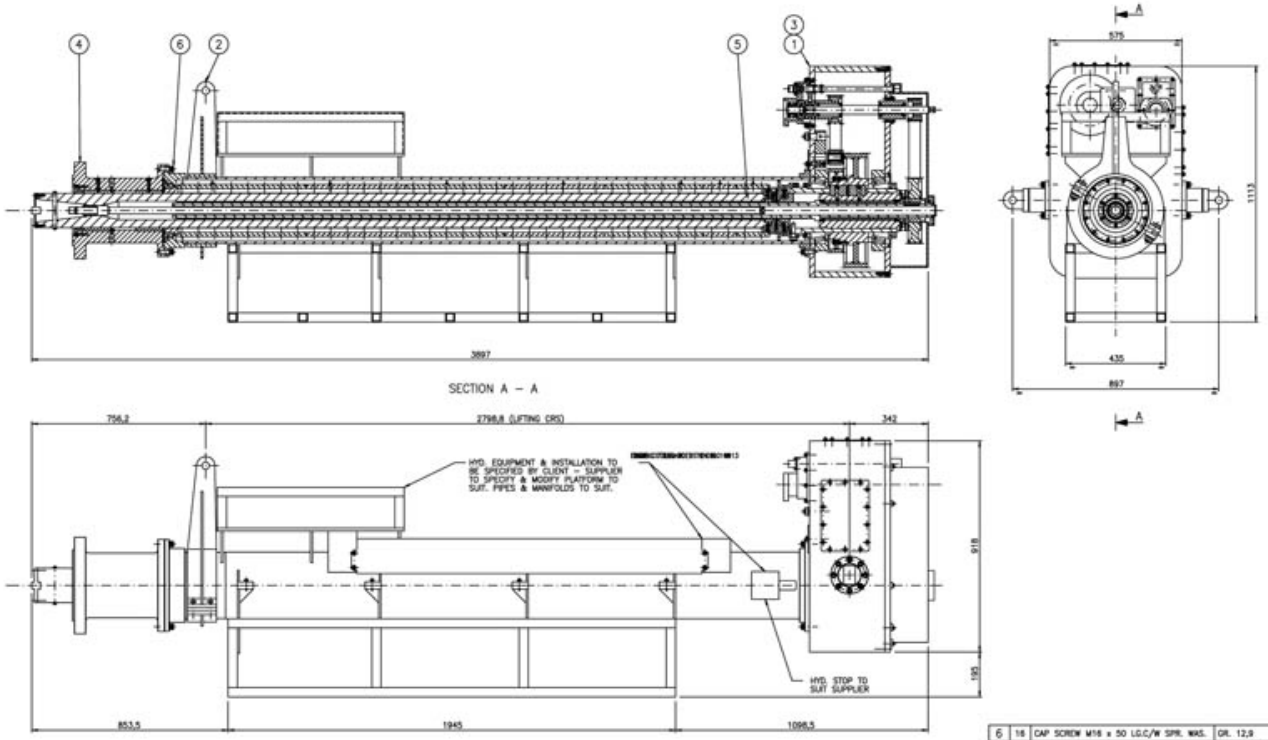

TAPPING MACHINE – SIZE DIA. 90/100 – GENERAL ARRANGEMENT

ITEM	REQD	DESCRIPTION	DRG No. – REMARKS
6	16	CAP SCREW M16 x 50 LG.C/W SPR. WAS.	GR. 12,9
5	1	INSPECTION COVER	PTS–90–100–05
4	1	END KNOCKING ASSEMBLY	PTS–90–100–07
3	1	POST ASSEMBLED GEARBOX ARRANGEMENT	PTS–90–100–06
2	1	DRIVE TUBE ARRANGEMENT	PTS–90–100–04
1	1	GEARBOX ARRANGEMENT	PTS–90–100–02

SCREW THREADS TO BS 3634 U.S.S.
INDICATING SURFACE TEXTURE TO ISO 1302
SYSTEM OF LIMITS & FITS TO ISO 286
GENERAL TOLERANCES TO ISO 2768–mK
GEOMETRICAL TOLERANCING TO BS 308 PART 3
WELDING SYMBOLS TO SABS 044 / PART II
WELDING TO RELEVANT AWS STANDARD

DESIGN & DRAUGHTING CONSULTANTS cc.
REG. No. CK 97/01013/23 VAT No. 4630-204-0441

DRAWN	DATE	SCALE	POWER TECHNOLOGY SERVICES
		DO NOT SCALE	TAPPING MACHINE
CHECK	DATE		SIZE – DIA. 90/100
	15-06		GENERAL ARRANGEMENT
ISS.			
REV. 1	DRG No. PTS-90-100-01		SHEET 1 OF 1 A1

UNDERPRESSURE DRILLING MACHINES

Model PTS: 96100

- Large diameter drilling machine with 100 inch reach. Optional 130 inch reach
- Suitable for taps 12 inch through 72 inch diameter.
- Hydraulically powered advanced or retract boring bar or manual operation can be used.
- Variable rotational speed range gives extreme flexibility for all cutting applications.
- Maximum working pressure 1440 psig at 100of.
- Maximum operating temperature 700of at 700 psig.
- Tested to 2175 psig.
- Supplied with fixed ladder and integral tool box and ancillary tools.
- Full range of adaptors, cutters and pilot drills available.

UNDERPRESSURE DRILLING MACHINES

Model PTS: 96100

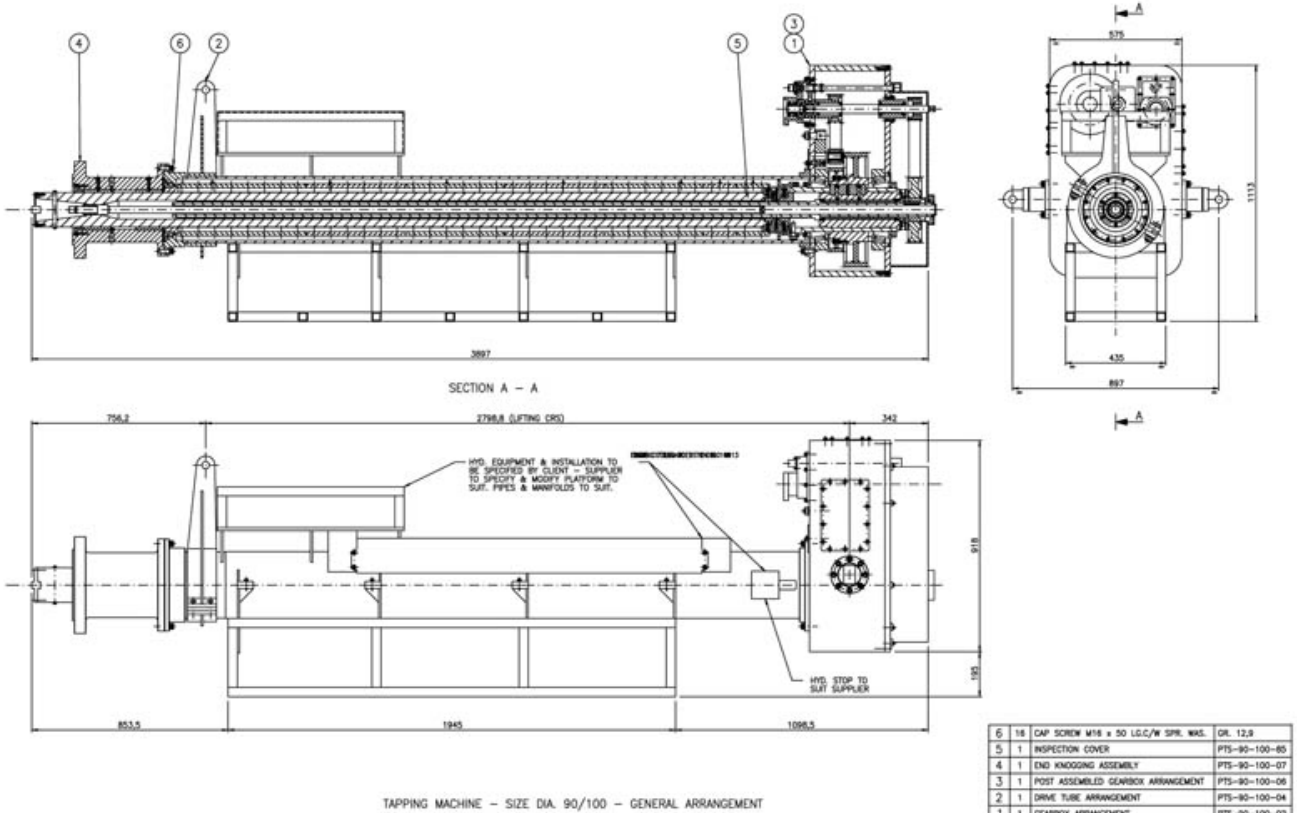

TAPPING MACHINE – SIZE DIA. 90/100 – GENERAL ARRANGEMENT

ITEM	REQD	DESCRIPTION	DWG No. – REMARKS
6	16	CAP SCREW M16 x 50 LG.C/W SPR. WAS.	GR. 12,9
5	1	INSPECTION COVER	PTS–90–100–05
4	1	END KNOCKING ASSEMBLY	PTS–90–100–07
3	1	POST ASSEMBLED GEARBOX ARRANGEMENT	PTS–90–100–06
2	1	DRIVE TUBE ARRANGEMENT	PTS–90–100–04
1	1	GEARBOX ARRANGEMENT	PTS–90–100–02

SCREW THREADS TO BS 3643 U.S.S.
INDICATING SURFACE TEXTURE TO ISO 1302
SYSTEM OF LIMITS & FITS TO ISO 286
GENERAL TOLERANCES TO ISO 2768-m
GEOMETRICAL TOLERANCING TO BS 308 PART 3
WELDING SYMBOLS TO SABS 044 : PART 2
WELDING TO RELEVANT AWS STANDARD

DESIGN & DRAUGHTING CONSULTANTS cc.
POWER TECHNOLOGY SERVICES
TAPPING MACHINE
SIZE – DIA. 90/100
GENERAL ARRANGEMENT
DRG. No. PTS–90–100–01 | SHEET 1 OF 1 | A1

CONTACT DETAILS

For more information about Power Technology Services, please contact us at the details below:

POWER PIPELINE TECHNOLOGY – HYDRA VALVE GROUP

World Wide Head Quarters

Dubai UAE

Mob: +971 52 795 1548

Tel: +971 4 277 4566

Fax: +971 4 277 4566

www.powerpipelinetechnology.com

email: info@hvwwg.com

Technical Information

30” GATE VALVE - CLASS 600

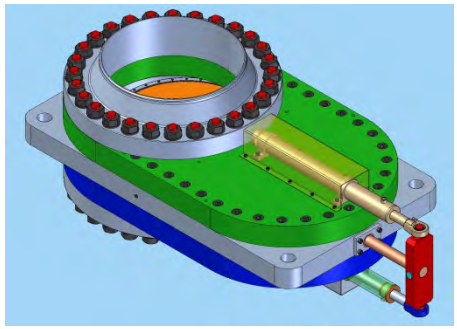

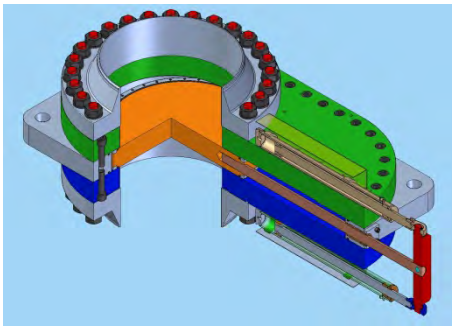

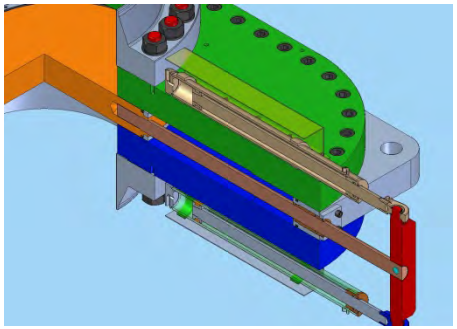

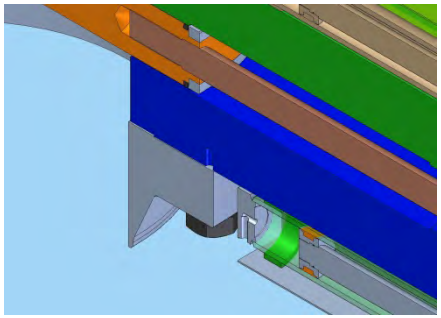

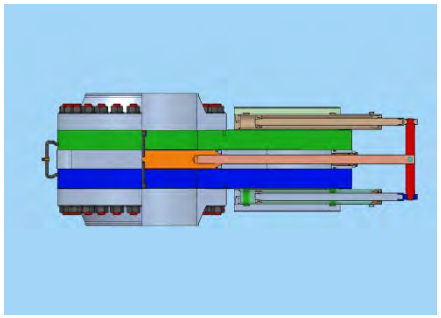

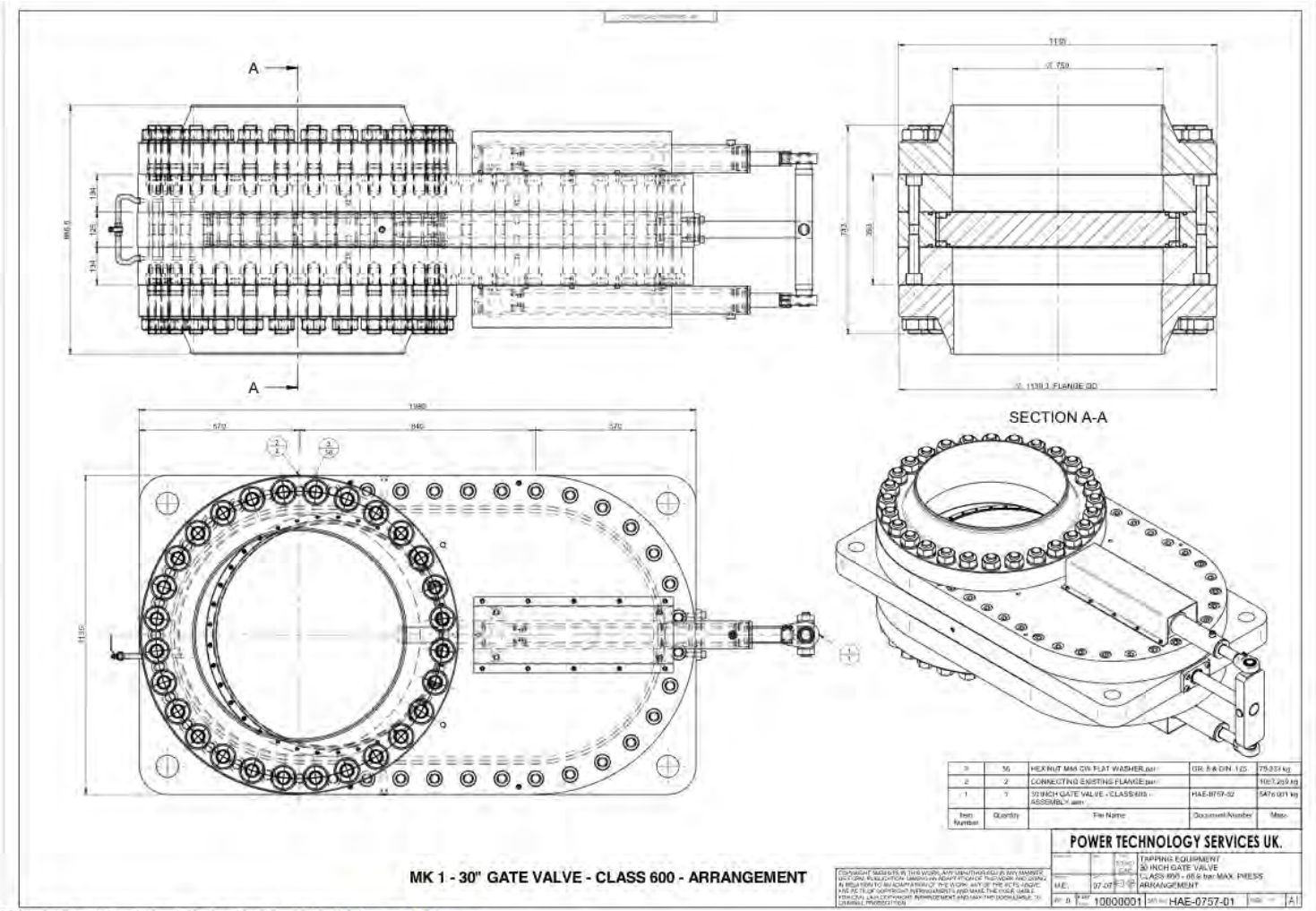

PDF created with FinePrint pdfFactory Pro trial version http://www.pdffactory.com

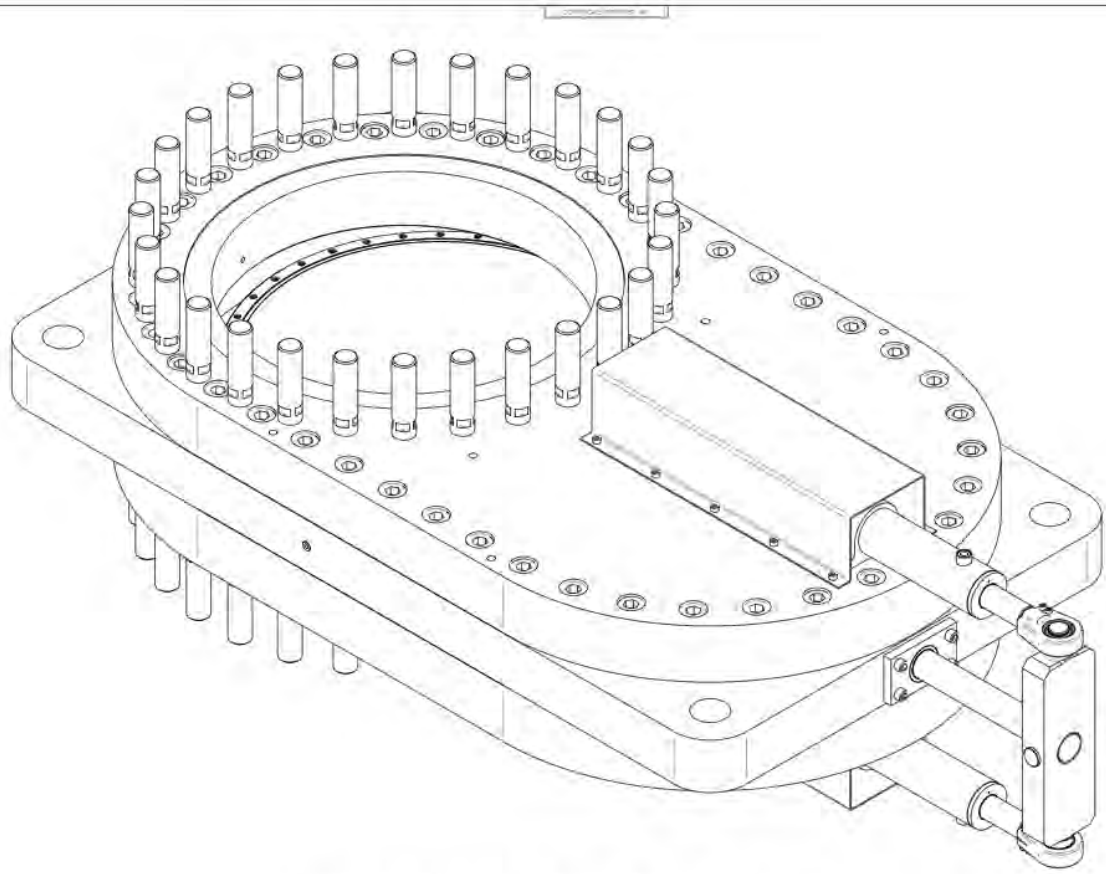

MK 1 - 30" GATE VALVE - CLASS 600 - ASSEMBLY - ISOMETRIC VIEW

FOR ARRGT. SEE HAE-0757-01

POWER TECHNOLOGY SERVICES UK.

TAPPING EQUIPMENT
30 INCH GATE VALVE
CLASS 600 - 86.2 bar MAX. PRESS
ASSEMBLY - ISOMETRIC VIEW

M.E. 07-07

10000001 HAE-0757-03 A1

PDF created with FinePrint pdfFactory Pro trial version http://www.pdffactory.com

CLASS 600 DEFLECTION MESH

QuickTime™ and a
Microsoft Video 1 decompressor
are needed to see this picture.

CLASS 600 STRESS MESH

QuickTime™ and a
Microsoft Video 1 decompressor
are needed to see this picture.

TOP COVER LOADED WITH INTERNAL PRESS. COVER CONSTRAINED BY 41 CAPSCREW HOLE

Part Properties

Part Name	CENTRAL HOUSING COVER TOP-FEA-30.par
Mass	1502.60 kg
Volume	191829627.97 mm^3
Weight	14725.494 N

Material Properties

Material Name	DILLIMAX 690
Mass Density	7833.00 kg/m^3
Young's Modulus	199947.953 MegaPa
Poisson's Ratio	0.290
Thermal Expansion Coefficient	0.0000 /C
Thermal Conductivity	0.032 kW/m-C
Yield Strength	670.001 MegaPa
Ultimate Strength	850.000 MegaPa

Load and Constraint Information

Load Set

Load Set Name	Load 1
Load Type	Pressure
Number of Load Elements	1
Load value	6.890 MegaPa

Constraints

Number of Constrained Faces	43

Study Properties

Mesh Type	Tetrahedral Mesh
Number of elements	27,825
Number of nodes	50,612
Solver Type	Nastran

Stress Results

Type	Extent	Value	X	Y	Z
Von Mises Stress	Minimum	2.012e-001 MegaPa	-565.08 mm	-52.36 mm	134.00 mm
	Maximum	3.852e+002 MegaPa	480.00 mm	483.15 mm	94.00 mm

Displacement Results

Type	Extent	Value	X	Y	Z
Resultant Displacement	Minimum	0.00e+000 mm	360.00 mm	-483.15 mm	94.00 mm
	Maximum	8.98e-001 mm	375.00 mm	0.00 mm	67.10 mm

Factor of Safety

Factor of Safety Value	1.740

CLASS 600 DEFLECTION MESH

QuickTime™ and a
Microsoft Video 1 decompressor
are needed to see this picture.

CLASS 600 STRESS MESH

QuickTime™ and a
Microsoft Video 1 decompressor
are needed to see this picture.

TOP COVER - INTERNAL PRESS APPLIED - SURFACE ON CENTRAL COVER WILL BE USED FOR CONSTRAINED - USE CAP SCREW BOLTING FRICTION FORCE.

Part Properties

Part Name	CENTRAL HOUSING COVER TOP-FEA-31.par
Mass	1502.60 kg
Volume	191829627.97 mm^3
Weight	14725.494 N

Material Properties

Material Name	DILLIMAX 690
Mass Density	7833.00 kg/m^3
Young's Modulus	199947.953 MegaPa
Poisson's Ratio	0.290
Thermal Expansion Coefficient	0.0000 /C
Thermal Conductivity	0.032 kW/m-C
Yield Strength	670.001 MegaPa
Ultimate Strength	850.000 MegaPa

Load and Constraint Information

Load Set

Load Set Name	Load 1
Load Type	Pressure
Number of Load Elements	1
Load value	6.890 MegaPa

Constraints

Number of Constrained Faces	1

Study Properties

Mesh Type	Tetrahedral Mesh
Number of elements	27,825
Number of nodes	50,612
Solver Type	Nastran

Stress Results

Type	Extent	Value	X	Y	Z
Von Mises Stress	Minimum	3.981e-002 MegaPa	-538.78 mm	-15.88 mm	0.00 mm
	Maximum	2.563e+002 MegaPa	480.00 mm	483.15 mm	94.00 mm

Displacement Results

Type	Extent	Value	X	Y	Z
Resultant Displacement	Minimum	0.00e+000 mm	528.41 mm	-517.62 mm	0.00 mm
	Maximum	5.34e-001 mm	375.00 mm	0.00 mm	67.10 mm

Factor of Safety

Factor of Safety Value	2.614

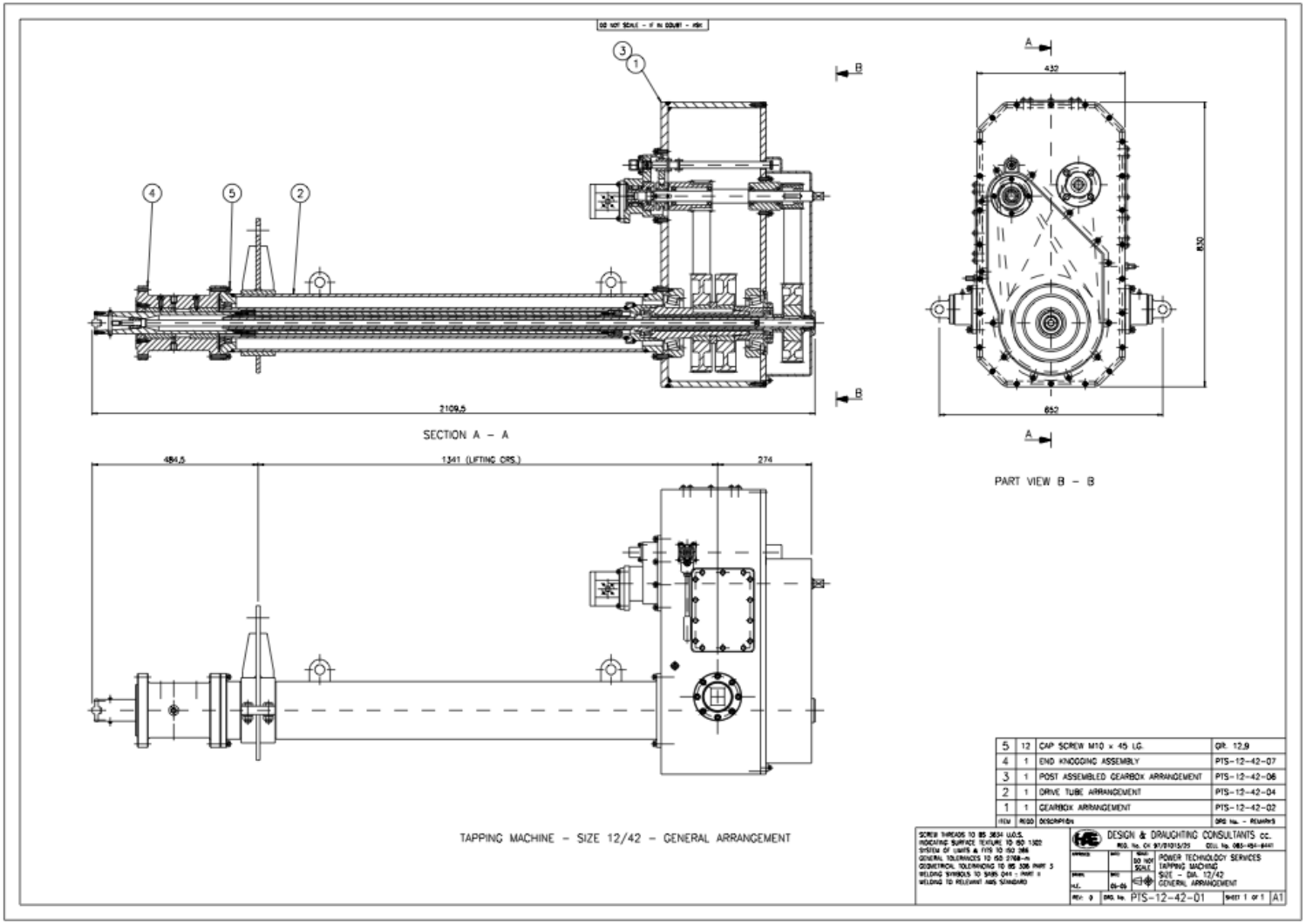
DO NOT SCALE - IF IN DOUBT - ASK
SECTION A - A
2109,5
PART VIEW B - B
432
830
652
484,5
1341 (LIFTING CRS.)
274
TAPPING MACHINE - SIZE 12/42 - GENERAL ARRANGEMENT
5 12 CAP SCREW M10 x 45 LG. QR. 12,9
4 1 END KNOGGING ASSEMBLY PTS-12-42-07
3 1 POST ASSEMBLED GEARBOX ARRANGEMENT PTS-12-42-06
2 1 DRIVE TUBE ARRANGEMENT PTS-12-42-04
1 1 GEARBOX ARRANGEMENT PTS-12-42-02
ITEM REQD DESCRIPTION DRG No. - REMARKS
DESIGN & DRAUGHTING CONSULTANTS cc.
POWER TECHNOLOGY SERVICES
TAPPING MACHINE
SIZE - DIA. 12/42
GENERAL ARRANGEMENT
DO NOT SCALE
PTS-12-42-01
SHEET 1 OF 1
A1

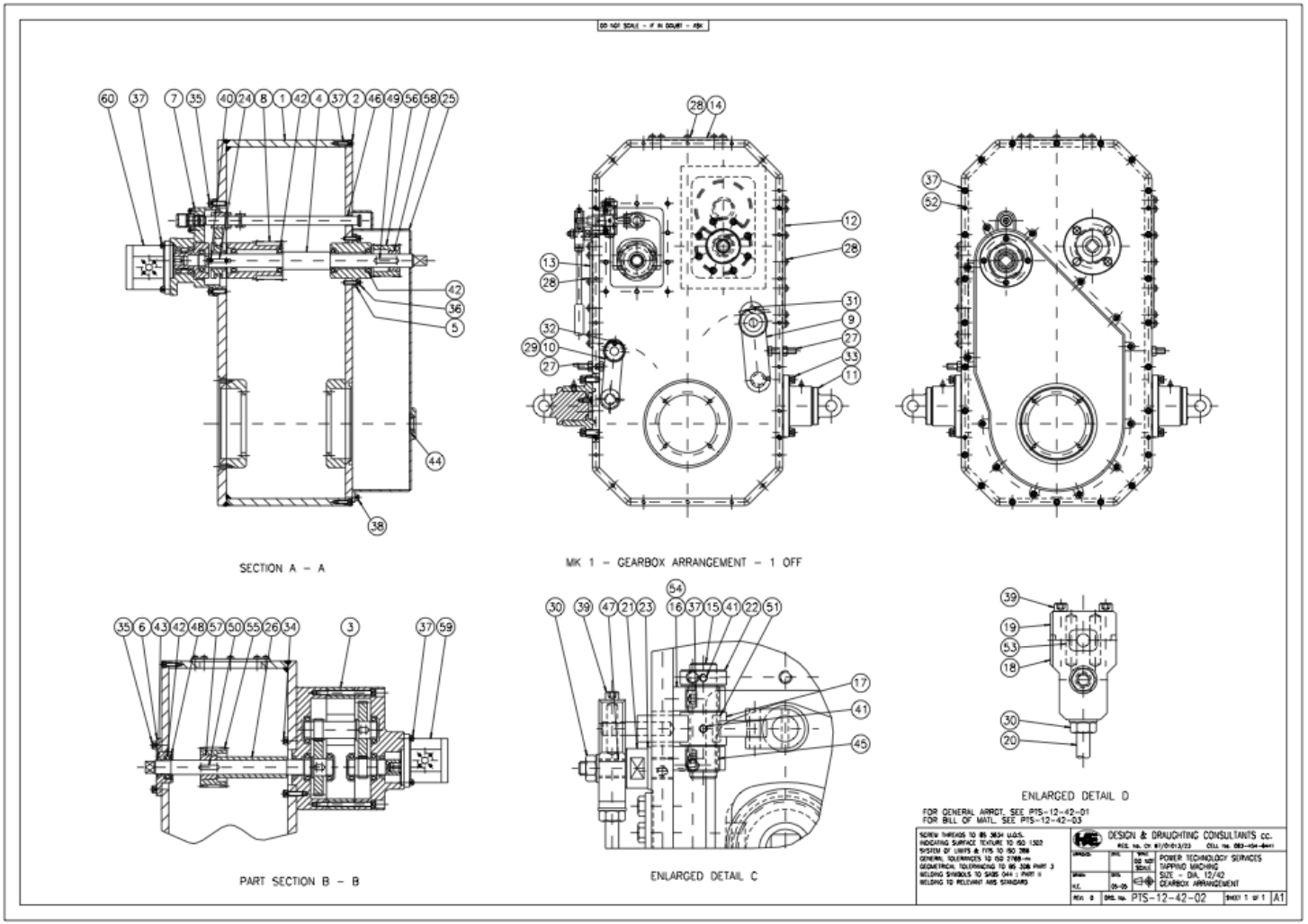
SECTION A – A
MK 1 – GEARBOX ARRANGEMENT – 1 OFF
PART SECTION B – B
ENLARGED DETAIL C
ENLARGED DETAIL D
FOR GENERAL ARRGT. SEE PTS-12-42-01
FOR BILL OF MATL. SEE PTS-12-42-03
DESIGN & DRAUGHTING CONSULTANTS cc.
POWER TECHNOLOGY SERVICES
SUPPING WASHING
SIZE – DIA. 12/42
GEARBOX ARRANGEMENT
PTS-12-42-02

DO NOT SCALE - IF IN DOUBT - ASK

MK 1 – GEARBOX ARRANGEMENT – BILL OF MATL.

ITEM	REQD	DESCRIPTION	DRG No. - REMARKS
60	1	HYD. MOTOR No. HY/MZFS13/B A203	BOSCH
59	1	HYD. MOTOR No. HY/MZFS13/16 A203	BOSCH
58	1	TAPER LOCK No. 1210-30	FENNER
57	1	TAPER LOCK No. 1615-32	FENNER
56	1	SPROCKET No. 28-8M-50	FENNER
55	1	SPROCKET No. 34-8M-50	FENNER
54	4	DOWEL DIA. 5 x 10 LG.	DIN. 6325
53	2	DOWEL DIA. 8 x 35 LG.	DIN. 6325
52	4	DOWEL DIA. 10 x 30 LG.	DIN. 7979
51	1	KEY 6 x 6 x 20 LG.DOUBLE BULL NOSE	SAE. 1045
50	1	KEY 10 x 8 x 47 LG.DOUBLE BULL NOS	SAE. 1045
49	1	KEY 10 x 8 x 56 LG.DOUBLE BULL NOS	SAE. 1045
48	1	INTERNAL CIRCLIP NS. 55	DIN. 472
47	1	SLIDING BUSH 12 x 14 x 20 LG.	SKF.
46	1	SLIDING BUSH 20 x 23 x 15 LG.	SKF.
45	2	SLIDING BUSH 20 x 23 x 20 LG.	SKF.
44	1	OIL SEAL 25 x 42 x 7	ANGUS HAWKEN
43	1	OIL SEAL 30 x 45 x 8	ANGUS HAWKEN
42	5	BEARING 30 x 55 x 13 No. 6006-2RS	SKF.
41	2	GRUB SCREW M6 x 8 LG.	GR. 12,9
40	4	CSK. CAP SCREW M3 x 10 LG.	GR. 12,9
39	2	CAP SCREW M6 x 35 LG.	GR. 12,9
38	13	CAP SCREW M8 x 20 LG.	GR. 12,9
37	36	CAP SCREW M8 x 25 LG.	GR. 12,9
36	4	CAP SCREW M8 x 30 LG.	GR. 12,9
35	14	CAP SCREW M10 x 30 LG.	GR. 12,9
34	8	CAP SCREW M10 x 35 LG.	GR. 12,9
33	16	CAP SCREW M12 x 30 LG.	GR. 12,9
32	1	CAP SCREW M12 x 45 LG.	GR. 12,9
31	1	CAP SCREW M16 x 45 LG.	GR. 12,9
30	2	HEX NUT M10 C/W WASHER	GR. 8
29	2	HEX NYLOC NUT M20 C/W WASHER	GR. 8
28	42	HEX BOLT M8 x 20 LG.	GR. 8,8
27	2	HEX BOLT M12x60LG. C/W NUT& WASHER	GR. 8,8
26	1	SHAFT SPACER	PTS-12-42-45
25	1	BELT COVER	PTS-12-42-46
24	1	CLUTCH KEY	PTS-12-42-45
23	1	CLUTCH LEVER PIN WASHER	PTS-12-42-45
22	1	CLUTCH SHAFT RETAINER	PTS-12-42-42
21	1	CLUTCH LEVER PIN	PTS-12-42-42
20	1	CLUTCH LEVER	PTS-12-42-42
19	1	CLUTCH LEVER BLOCK #2	PTS-12-42-44
18	1	CLUTCH LEVER BLOCK #1	PTS-12-42-44
17	1	CLUTCH SHAFT FORK	PTS-12-42-43
16	1	CLUTCH BEARING BLOCK	PTS-12-42-43
15	1	CLUTCH SHAFT	PTS-12-42-42
14	1	INSPECTION COVER #3	PTS-12-42-41
13	1	INSPECTION COVER #2	PTS-12-42-41
12	1	INSPECTION COVER #1	PTS-12-42-41
11	1	LIFTING LUG ASSEMBLY	PTS-12-42-37
10	1	TENSIONER ASSEMBLY #2	PTS-12-42-34
9	1	TENSIONER ASSEMBLY #1	PTS-12-42-31
8	1	SHAFT BEARING HOUSING #3 ASSEMBLY	PTS-12-42-28
7	1	DOG CLUTCH HOUSING ASSEMBLY	PTS-12-42-22
6	1	BEARING HOUSING #2	PTS-12-42-21
5	1	BEARING HOUSING #1	PTS-12-42-20
4	1	DRIVE SHAFT	PTS-12-42-19
3	1	DRIVE GEARBOX ASSEMBLY	PTS-12-42-13
2	1	GEARBOX HOUSING COVER	PTS-12-42-12
1	1	BEARBOX HOUSING	PTS-12-42-10

FOR GENERAL ARRGT. SEE PTS-12-42-01
FOR BILL OF MATL. SEE PTS-12-42-03

SCREW THREADS TO BS 3643 U.O.S.
INDICATING SURFACE TEXTURE TO ISO 1302
SYSTEM OF LIMITS & FITS TO ISO 286
GENERAL TOLERANCES TO ISO 2768-m
GEOMETRICAL TOLERANCING TO BS 308 PART 3
WELDING SYMBOLS TO SABS 044 : PART II
WELDING TO RELEVANT AWS STANDARD

DESIGN & DRAUGHTING CONSULTANTS cc.
REG. No. CK 97/01013/23 CELL No. 083-454-6441

APPROVED: DATE: SCALE: DO NOT SCALE
DRAWN: M.E. DATE: 05-05
POWER TECHNOLOGY SERVICES
TAPPING MACHINE
SIZE - DIA. 12/42
GEARBOX ARRGT. - BILL OF MATL
REV. 0 DRG. No. PTS-12-42-03 SHEET 1 OF 1 A2

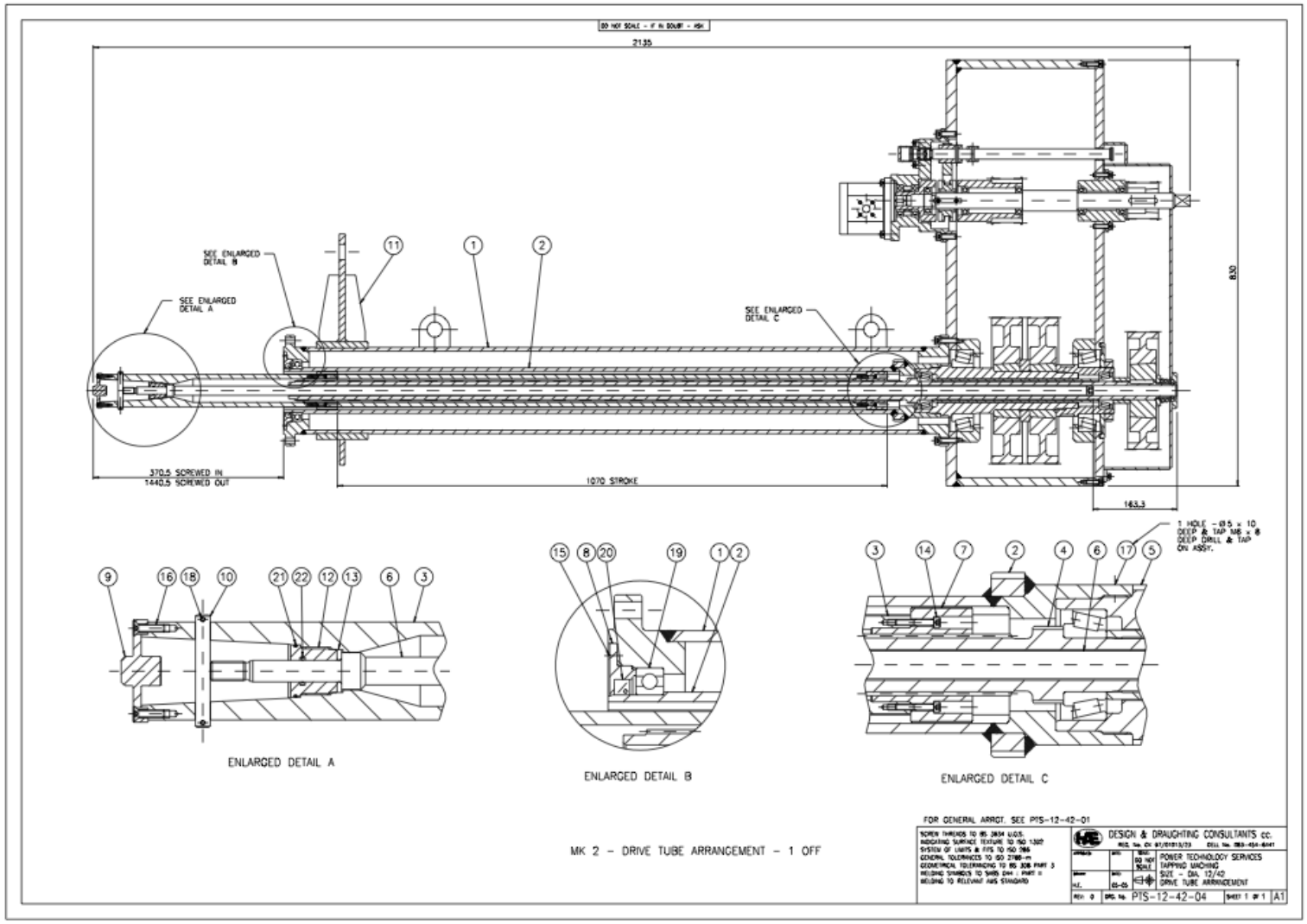

MK 2 - DRIVE TUBE ARRANGEMENT - 1 OFF

DO NOT SCALE – IF IN DOUBT – ASK

MK 2 – DRIVE TUBE ARRANGEMENT – BILL OF MATL.

ITEM	REQD	DESCRIPTION	DRG No. – REMARKS
20	1	OIL SEAL 85 x 105 x 10	ANGUS HAWKEN
19	1	BEARING 85 x 120 x 18 No.61917–2RS	SKF.
18	2	SPLIT PIN DIA. 2,5 x 25 LG.	DIN. 94
17	1	GRUB SCREW M6 x 8 LG.	GR. 12,9
16	6	CSK. CAP SCREW M5 x 20 LG.	GR. 12,9
15	12	CSK. CAP SCREW M6 x 16 LG.	GR. 12,9
14	8	CAP SCREW M4 x 25 LG.	GR. 12,9
13	1	LOCKING BAR WASHER	PTS–12–42–52
12	1	LOCKING BAR NUT	PTS–12–42–52
11	1	LIFTING RING ASSEMBLY	PTS–12–42–56
10	1	STOPPING PIN	PTS–12–42–56
9	1	DOG COUPLING	PTS–12–42–55
8	1	SEAL RETAINER	PTS–12–42–54
7	1	FEED SCREW NUT	PTS–12–42–53
6	1	CUTTER LOCKING BAR	PTS–12–42–52
5	1	OUTER TUBE EXTENSION #1	PTS–12–42–51
4	1	FEED SCREW	PTS–12–42–50
3	1	BORING BAR	PTS–12–42–49
2	1	OUTER TUBE	PTS–12–42–48
1	1	MAIN HOUSING	PTS–12–42–47

22	1	O–RING 13,94 ID. x 2,62 SEC.	BS. 2–113
21	1	O–RING 31,47 ID. x 1,78 SEC.	BS. 2–026

FOR GENERAL ARRGT. SEE PTS–12–42–01
FOR DRIVE TUBE ARRGT. SEE PTS–12–42–04

SCREW THREADS TO BS 3634 U.O.S.
INDICATING SURFACE TEXTURE TO ISO 1302
SYSTEM OF LIMITS & FITS TO ISO 286
GENERAL TOLERANCES TO ISO 2768–m
GEOMETRICAL TOLERANCING TO BS 308 PART 3
WELDING SYMBOLS TO SABS 044 : PART II
WELDING TO RELEVANT AWS STANDARD

DESIGN & DRAUGHTING CONSULTANTS cc.
REG. No. CK 97/01013/23 CELL No. 083–454–6441

APPROVED:	DATE:	SCALE: DO NOT SCALE	POWER TECHNOLOGY SERVICES TAPPING MACHING SIZE – DIA. 12/42 DRIVE TUBE – BILL OF MATL.
DRAWN: H.E.	DATE: 12–04		
REV: 0	DRG. No. PTS–12–42–05	SHEET 1 OF 1	A3

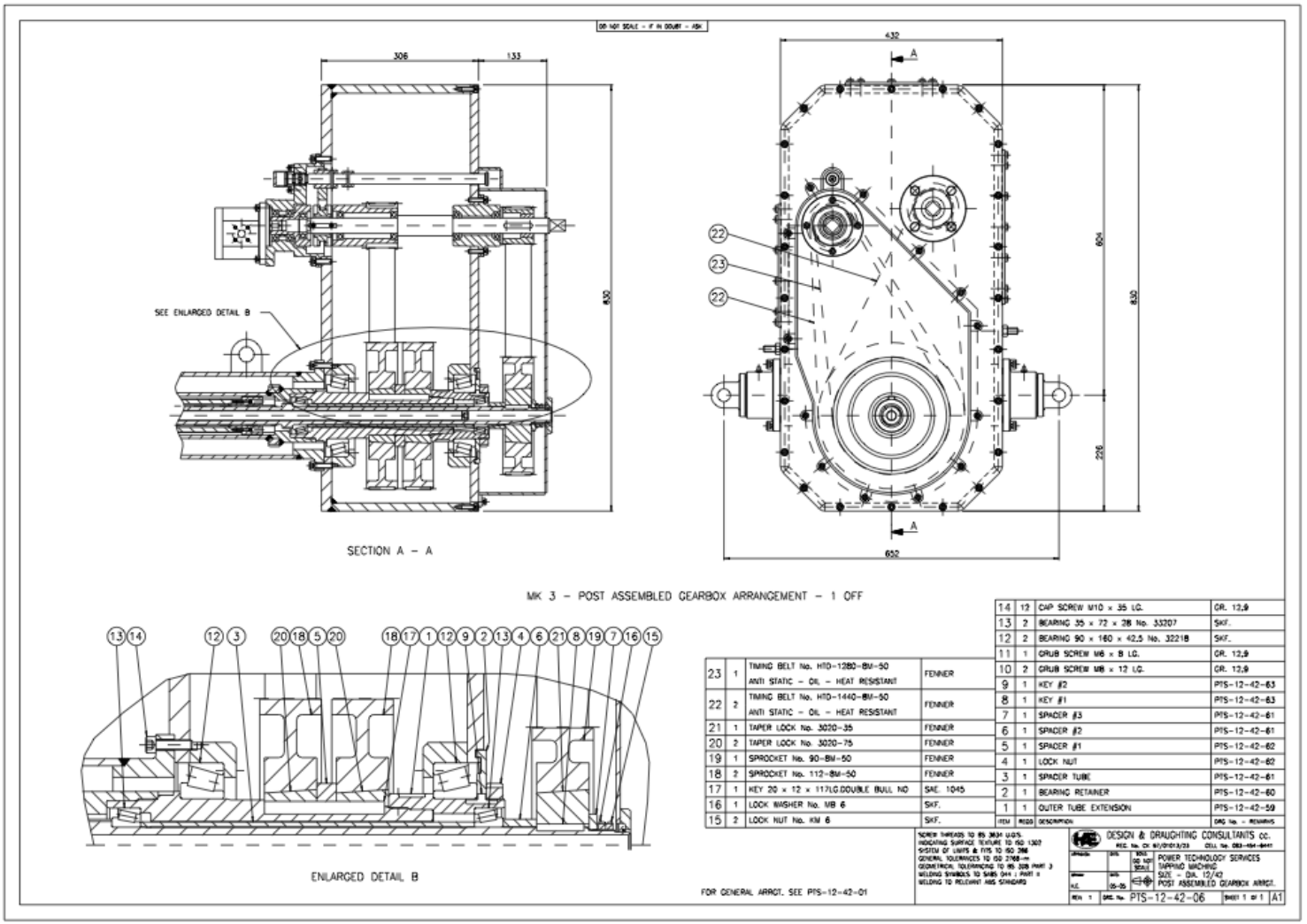
DO NOT SCALE - IF IN DOUBT - ASK
306
133
432
A
SEE ENLARGED DETAIL B
830
604
226
652
22
23
SECTION A - A
MK 3 - POST ASSEMBLED GEARBOX ARRANGEMENT - 1 OFF
13 14 12 3 20 18 5 20 18 17 1 12 9 2 13 4 6 21 8 19 7 16 15
ENLARGED DETAIL B
FOR GENERAL ARRGT. SEE PTS-12-42-01
23 1 TIMING BELT No. HTD-1280-8M-50 ANTI STATIC - OIL - HEAT RESISTANT FENNER
22 2 TIMING BELT No. HTD-1440-8M-50 ANTI STATIC - OIL - HEAT RESISTANT FENNER
21 1 TAPER LOCK No. 3020-35 FENNER
20 2 TAPER LOCK No. 3020-75 FENNER
19 1 SPROCKET No. 90-8M-50 FENNER
18 2 SPROCKET No. 112-8M-50 FENNER
17 1 KEY 20 x 12 x 117LG.DOUBLE BULL NO SAE. 1045
16 1 LOCK WASHER No. MB 6 SKF.
15 2 LOCK NUT No. KM 6 SKF.
14 12 CAP SCREW M10 x 35 LG. GR. 12,9
13 2 BEARING 35 x 72 x 28 No. 33207 SKF.
12 2 BEARING 90 x 160 x 42,5 No. 32218 SKF.
11 1 GRUB SCREW M6 x 8 LG. GR. 12,9
10 2 GRUB SCREW M8 x 12 LG. GR. 12,9
9 1 KEY #2 PTS-12-42-63
8 1 KEY #1 PTS-12-42-63
7 1 SPACER #3 PTS-12-42-61
6 1 SPACER #2 PTS-12-42-61
5 1 SPACER #1 PTS-12-42-62
4 1 LOCK NUT PTS-12-42-62
3 1 SPACER TUBE PTS-12-42-61
2 1 BEARING RETAINER PTS-12-42-60
1 1 OUTER TUBE EXTENSION PTS-12-42-59
ITEM REQD DESCRIPTION DRG No. - REMARKS
DESIGN & DRAUGHTING CONSULTANTS cc.
POWER TECHNOLOGY SERVICES
TAPPING MACHINE
SIZE - DIA. 12/42
POST ASSEMBLED GEARBOX ARRGT.
PTS-12-42-06
A1

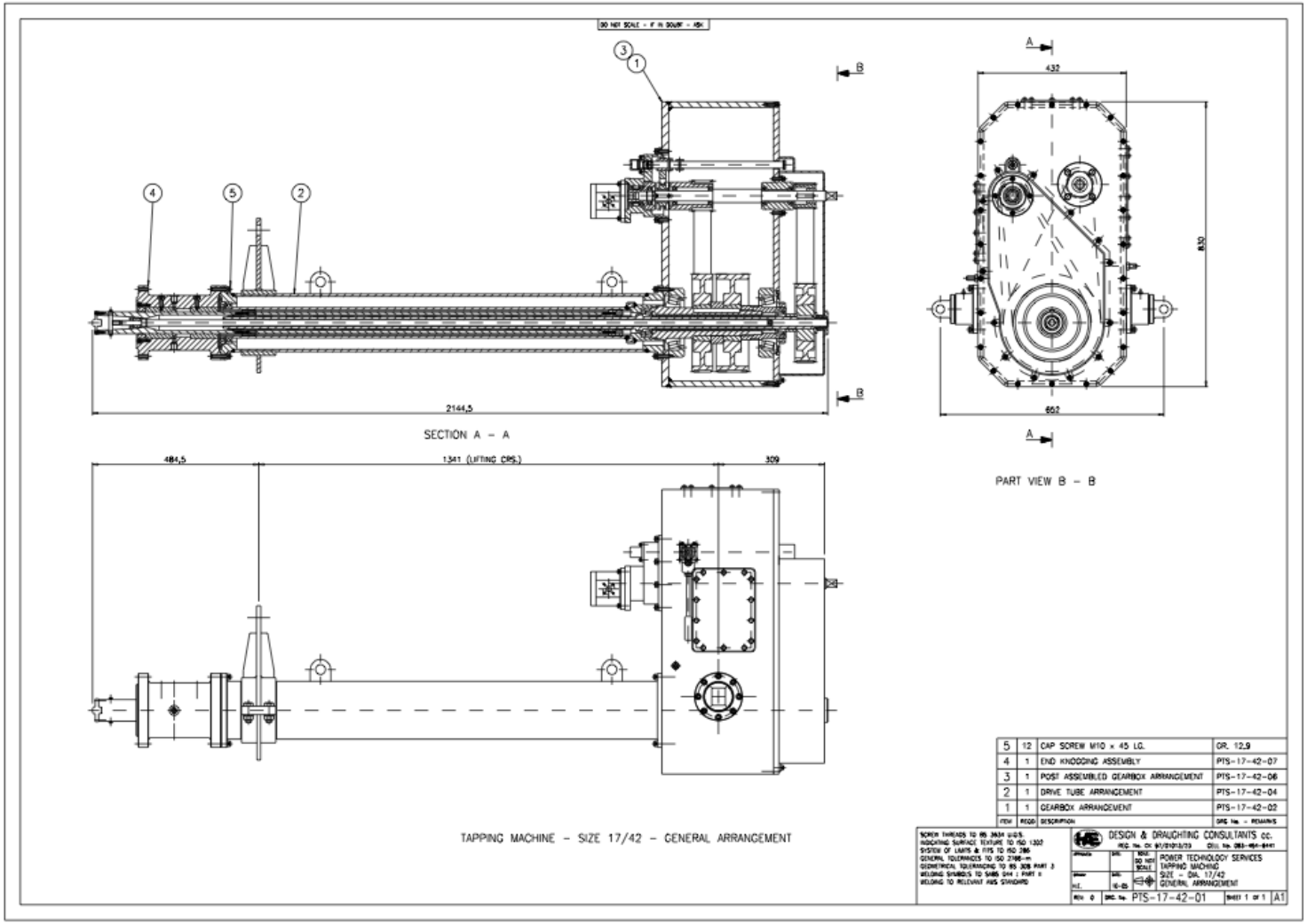

ITEM	QTY	DESCRIPTION	DRG No. – REMARKS
5	12	CAP SCREW M10 x 45 LG.	GR. 12.9
4	1	END KNOCKING ASSEMBLY	PTS-17-42-07
3	1	POST ASSEMBLED GEARBOX ARRANGEMENT	PTS-17-42-06
2	1	DRIVE TUBE ARRANGEMENT	PTS-17-42-04
1	1	GEARBOX ARRANGEMENT	PTS-17-42-02

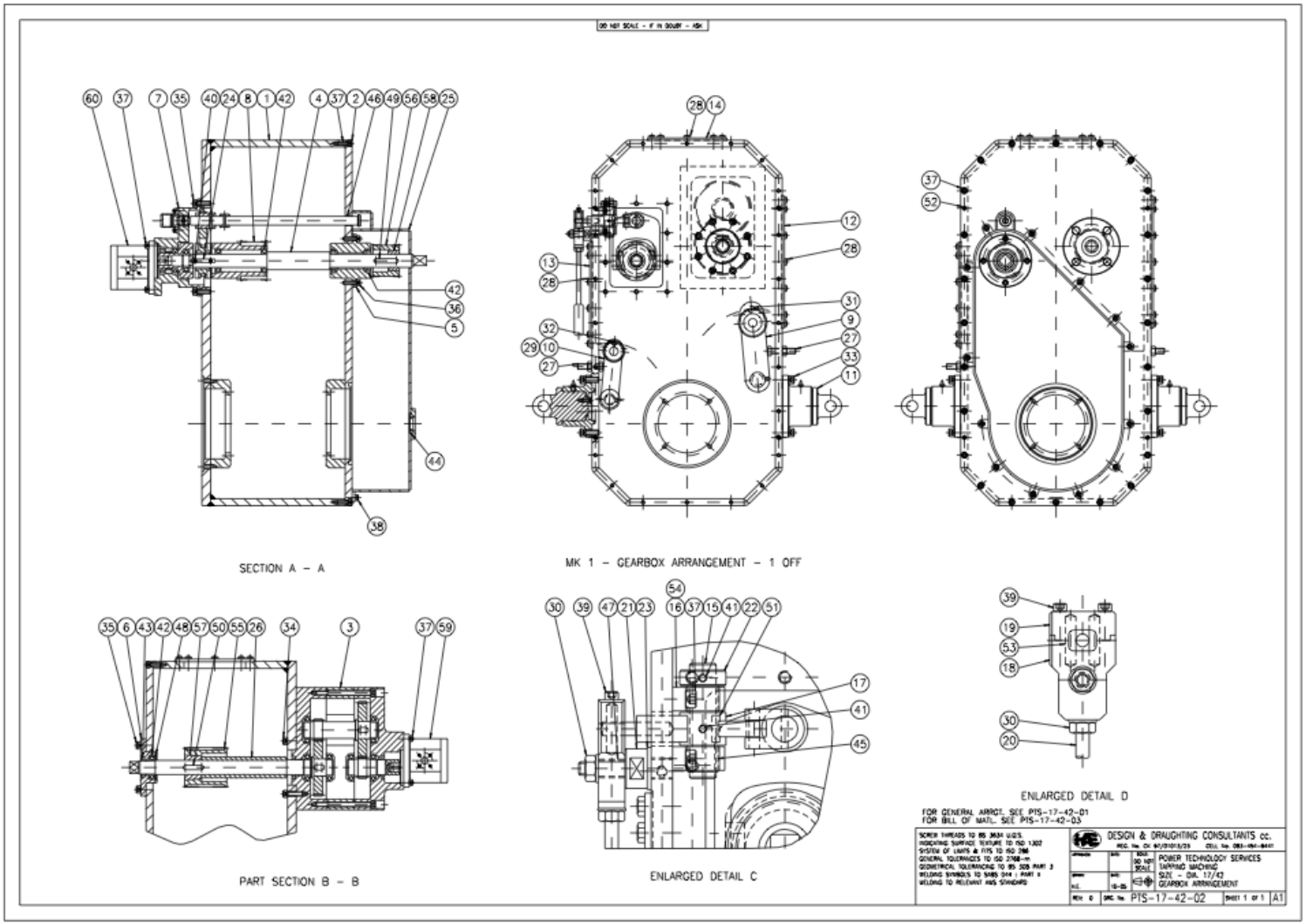
DO NOT SCALE - IF IN DOUBT - ASK
SECTION A – A
MK 1 – GEARBOX ARRANGEMENT – 1 OFF
PART SECTION B – B
ENLARGED DETAIL C
ENLARGED DETAIL D
FOR GENERAL ARRGT. SEE PTS-17-42-01
FOR BILL OF MATL. SEE PTS-17-42-03
DESIGN & DRAUGHTING CONSULTANTS cc.
POWER TECHNOLOGY SERVICES
TAPPING MACHINE
SIZE – DIA. 17/42
GEARBOX ARRANGEMENT
PTS-17-42-02
SHEET 1 of 1
A1

DO NOT SCALE - IF IN DOUBT - ASK

MK 1 – GEARBOX ARRANGEMENT – BILL OF MATL.

ITEM	REQD	DESCRIPTION	DRG No. – REMARKS
60	1	HYD. MOTOR No. HY/MZFS13/8 A203	BOSCH
59	1	HYD. MOTOR No. HY/MZFS13/16 A203	BOSCH
58	1	TAPER LOCK No. 1210–30	FENNER
57	1	TAPER LOCK No. 1615–32	FENNER
56	1	SPROCKET No. 28–8M–50	FENNER
55	1	SPROCKET No. 34–8M–50	FENNER
54	4	DOWEL DIA. 5 x 10 LG.	DIN. 6325
53	2	DOWEL DIA. 8 x 35 LG.	DIN. 6325
52	4	DOWEL DIA. 10 x 30 LG.	DIN. 7979
51	1	KEY 6 x 6 x 20 LG.DOUBLE BULL NOSE	SAE. 1045
50	1	KEY 10 x 8 x 47 LG.DOUBLE BULL NOS	SAE. 1045
49	1	KEY 10 x 8 x 56 LG.DOUBLE BULL NOS	SAE. 1045
48	1	INTERNAL CIRCLIP NS. 55	DIN. 472
47	1	SLIDING BUSH 12 x 14 x 20 LG.	SKF.
46	1	SLIDING BUSH 20 x 23 x 15 LG.	SKF.
45	2	SLIDING BUSH 20 x 23 x 20 LG.	SKF.
44	1	OIL SEAL 25 x 42 x 7	ANGUS HAWKEN
43	1	OIL SEAL 30 x 45 x 8	ANGUS HAWKEN
42	5	BEARING 30 x 55 x 13 No. 6006–2RS	SKF.
41	2	GRUB SCREW M6 x 8 LG.	GR. 12,9
40	4	CSK. CAP SCREW M3 x 10 LG.	GR. 12,9
39	2	CAP SCREW M6 x 35 LG.	GR. 12,9
38	13	CAP SCREW M8 x 20 LG.	GR. 12,9
37	36	CAP SCREW M8 x 25 LG.	GR. 12,9
36	4	CAP SCREW M8 x 30 LG.	GR. 12,9
35	14	CAP SCREW M10 x 30 LG.	GR. 12,9
34	8	CAP SCREW M10 x 35 LG.	GR. 12,9
33	16	CAP SCREW M12 x 30 LG.	GR. 12,9
32	1	CAP SCREW M12 x 45 LG.	GR. 12,9
31	1	CAP SCREW M16 x 45 LG.	GR. 12,9
30	2	HEX NUT M10 C/W WASHER	GR. 8
29	2	HEX NYLOC NUT M20 C/W WASHER	GR. 8
28	42	HEX BOLT M8 x 20 LG.	GR. 8,8
27	2	HEX BOLT M12x60LG. C/W NUT& WASHER	GR. 8,8
26	1	SHAFT SPACER	PTS–17–42–45
25	1	BELT COVER	PTS–17–42–46
24	1	CLUTCH KEY	PTS–17–42–45
23	1	CLUTCH LEVER PIN WASHER	PTS–17–42–45
22	1	CLUTCH SHAFT RETAINER	PTS–17–42–42
21	1	CLUTCH LEVER PIN	PTS–17–42–42
20	1	CLUTCH LEVER	PTS–17–42–42
19	1	CLUTCH LEVER BLOCK #2	PTS–17–42–44
18	1	CLUTCH LEVER BLOCK #1	PTS–17–42–44
17	1	CLUTCH SHAFT FORK	PTS–17–42–43
16	1	CLUTCH BEARING BLOCK	PTS–17–42–43
15	1	CLUTCH SHAFT	PTS–17–42–42
14	1	INSPECTION COVER #3	PTS–17–42–41
13	1	INSPECTION COVER #2	PTS–17–42–41
12	1	INSPECTION COVER #1	PTS–17–42–41
11	1	LIFTING LUG ASSEMBLY	PTS–17–42–37
10	1	TENSIONER ASSEMBLY #2	PTS–17–42–34
9	1	TENSIONER ASSEMBLY #1	PTS–17–42–31
8	1	SHAFT BEARING HOUSING #3 ASSEMBLY	PTS–17–42–28
7	1	DOG CLUTCH HOUSING ASSEMBLY	PTS–17–42–22
6	1	BEARING HOUSING #2	PTS–17–42–21
5	1	BEARING HOUSING #1	PTS–17–42–20
4	1	DRIVE SHAFT	PTS–17–42–19
3	1	DRIVE GEARBOX ASSEMBLY	PTS–17–42–13
2	1	GEARBOX HOUSING COVER	PTS–17–42–12
1	1	BEARBOX HOUSING	PTS–17–42–10

FOR GENERAL ARRGT. SEE PTS–17–42–01
FOR BILL OF MATL. SEE PTS–17–42–03

SCREW THREADS TO BS 3634 U.O.S.
INDICATING SURFACE TEXTURE TO ISO 1302
SYSTEM OF LIMITS & FITS TO ISO 286
GENERAL TOLERANCES TO ISO 2768–m
GEOMETRICAL TOLERANCING TO BS 308 PART 3
WELDING SYMBOLS TO SABS 044 : PART II
WELDING TO RELEVANT AWS STANDARD

DESIGN & DRAUGHTING CONSULTANTS cc.
REG. No. CK 97/01013/23 CELL No. 083–454–6441

APPROVED: | DATE: | SCALE: DO NOT SCALE | POWER TECHNOLOGY SERVICES
DRAWN: H.E. | DATE: 10–05 | TAPPING MACHINE
SIZE – DIA. 17/42
GEARBOX ARRGT. – BILL OF MATL
REV: 0 | DRG. No. PTS–17–42–03 | SHEET 1 OF 1 | A2

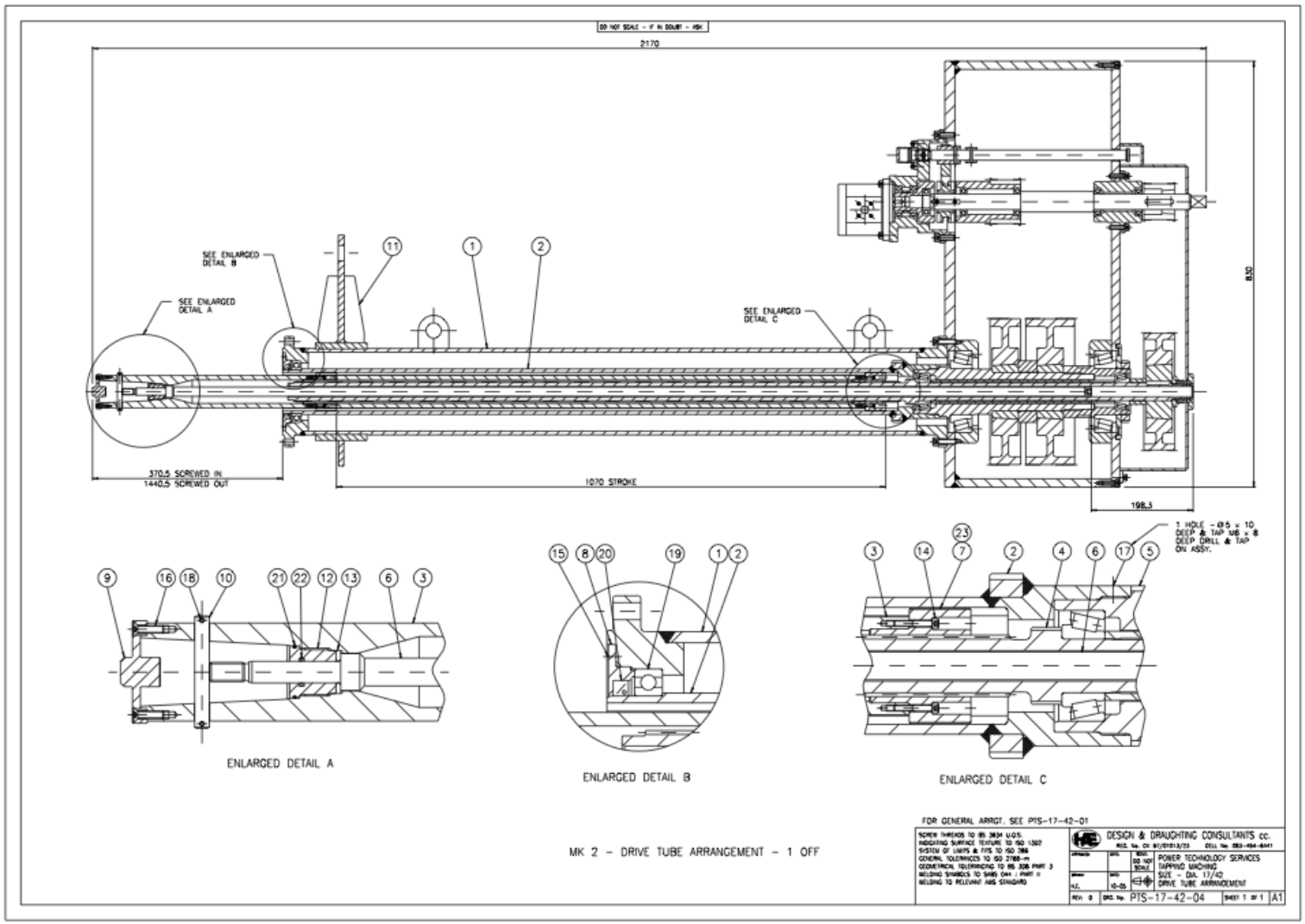

MK 2 – DRIVE TUBE ARRANGEMENT – 1 OFF

DO NOT SCALE – IF IN DOUBT – ASK

MK 2 – DRIVE TUBE ARRANGEMENT – BILL OF MATL.

ITEM	REQD	DESCRIPTION	DRG No. – REMARKS
20	1	OIL SEAL 85 x 105 x 10	ANGUS HAWKEN
19	1	BEARING 85 x 120 x 18 No.61917-2RS	SKF.
18	2	SPLIT PIN DIA. 2,5 x 25 LG.	DIN. 94
17	1	GRUB SCREW M6 x 8 LG.	GR. 12,9
16	6	CSK. CAP SCREW M5 x 20 LG.	GR. 12,9
15	12	CSK. CAP SCREW M6 x 16 LG.	GR. 12,9
14	8	CAP SCREW M4 x 25 LG.	GR. 12,9
13	1	LOCKING BAR WASHER	PTS-17-42-52
12	1	LOCKING BAR NUT	PTS-17-42-52
11	1	LIFTING RING ASSEMBLY	PTS-17-42-56
10	1	STOPPING PIN	PTS-17-42-56
9	1	DOG COUPLING	PTS-17-42-55
8	1	SEAL RETAINER	PTS-17-42-54
7	1	FEED SCREW NUT	PTS-17-42-53
6	1	CUTTER LOCKING BAR	PTS-17-42-52
5	1	OUTER TUBE EXTENSION #1	PTS-17-42-51
4	1	FEED SCREW	PTS-17-42-50
3	1	BORING BAR	PTS-17-42-49
2	1	OUTER TUBE	PTS-17-42-48
1	1	MAIN HOUSING	PTS-17-42-47

23	2	DOWEL PIN DIA. 4 x 30 LG.	DIN. 6325
22	1	O-RING 13,94 ID. x 2,62 SEC.	BS. 2-113
21	1	O-RING 31,47 ID. x 1,78 SEC.	BS. 2-026

FOR GENERAL ARRGT. SEE PTS-17-42-01
FOR DRIVE TUBE ARRGT. SEE PTS-17-42-04

SCREW THREADS TO BS 3634 U.O.S.
INDICATING SURFACE TEXTURE TO ISO 1302
SYSTEM OF LIMITS & FITS TO ISO 286
GENERAL TOLERANCES TO ISO 2768-m
GEOMETRICAL TOLERANCING TO BS 308 PART 3
WELDING SYMBOLS TO SABS 044 : PART II
WELDING TO RELEVANT AWS STANDARD

DESIGN & DRAUGHTING CONSULTANTS cc.
REG. No. CK 97/01013/23 CELL No. 083-454-6441

APPROVED:	DATE:	SCALE: DO NOT SCALE	POWER TECHNOLOGY SERVICES TAPPING MACHINE SIZE – DIA. 17/42 DRIVE TUBE – BILL OF MATL.
DRAWN: H.E.	DATE: 10-05		

REV: 0 DRG. No. PTS-17-42-05 SHEET 1 OF 1 A3

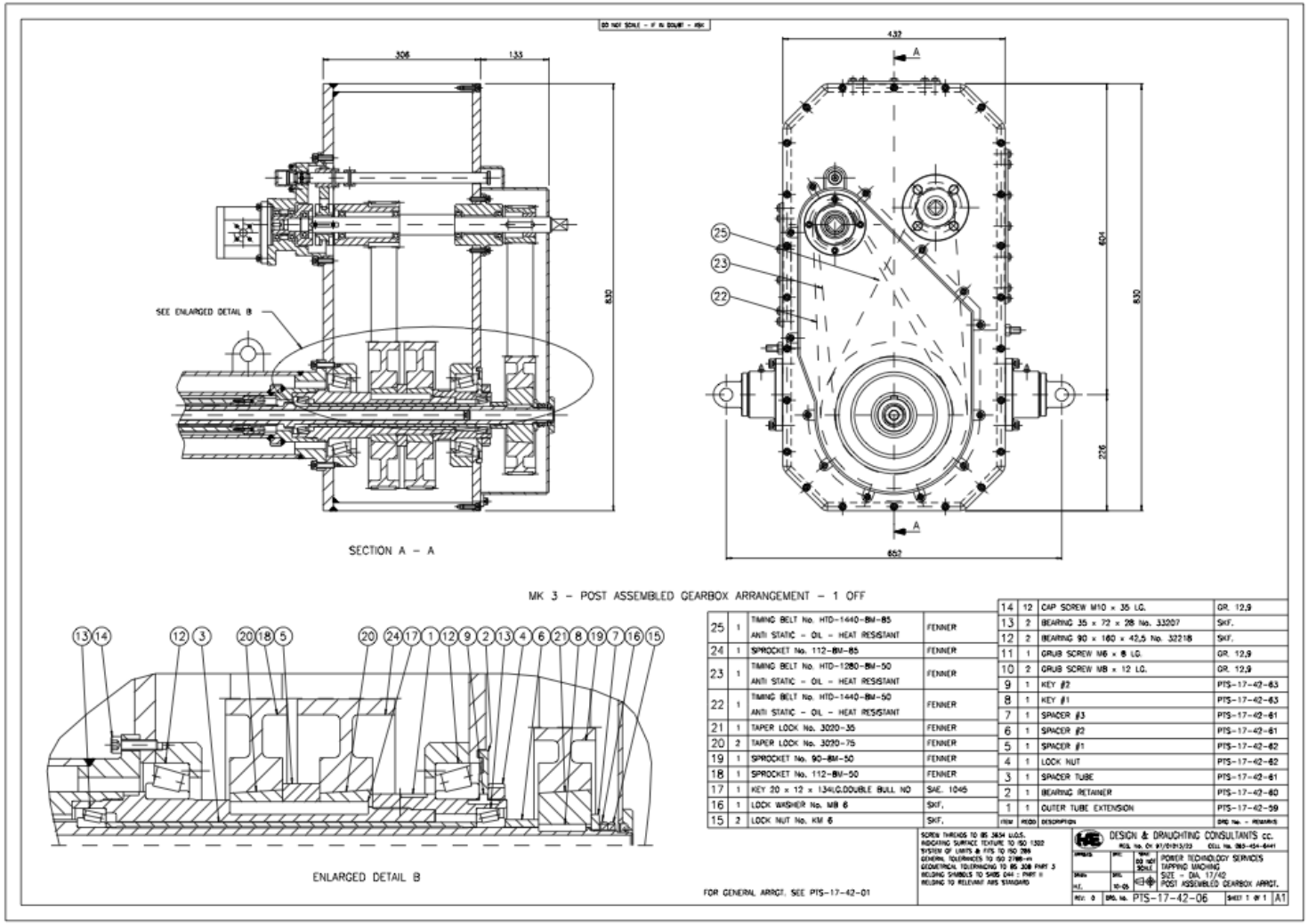

ITEM	QTY	DESCRIPTION	DRG No. – REMARKS
25	1	TIMING BELT No. HTD-1440-8M-85 ANTI STATIC – OIL – HEAT RESISTANT	FENNER
24	1	SPROCKET No. 112-8M-85	FENNER
23	1	TIMING BELT No. HTD-1280-8M-50 ANTI STATIC – OIL – HEAT RESISTANT	FENNER
22	1	TIMING BELT No. HTD-1440-8M-50 ANTI STATIC – OIL – HEAT RESISTANT	FENNER
21	1	TAPER LOCK No. 3020-35	FENNER
20	2	TAPER LOCK No. 3020-75	FENNER
19	1	SPROCKET No. 90-8M-50	FENNER
18	1	SPROCKET No. 112-8M-50	FENNER
17	1	KEY 20 x 12 x 134LG.DOUBLE BULL NO	SAE. 1045
16	1	LOCK WASHER No. M8 6	SKF.
15	2	LOCK NUT No. KM 6	SKF.
14	12	CAP SCREW M10 x 35 LG.	GR. 12.9
13	2	BEARING 35 x 72 x 28 No. 33007	SKF.
12	2	BEARING 90 x 160 x 42,5 No. 32218	SKF.
11	1	GRUB SCREW M6 x 8 LG.	GR. 12.9
10	2	GRUB SCREW M8 x 12 LG.	GR. 12.9
9	1	KEY #2	PTS-17-42-63
8	1	KEY #1	PTS-17-42-63
7	1	SPACER #3	PTS-17-42-61
6	1	SPACER #2	PTS-17-42-61
5	1	SPACER #1	PTS-17-42-62
4	1	LOCK NUT	PTS-17-42-62
3	1	SPACER TUBE	PTS-17-42-61
2	1	BEARING RETAINER	PTS-17-42-60
1	1	OUTER TUBE EXTENSION	PTS-17-42-59

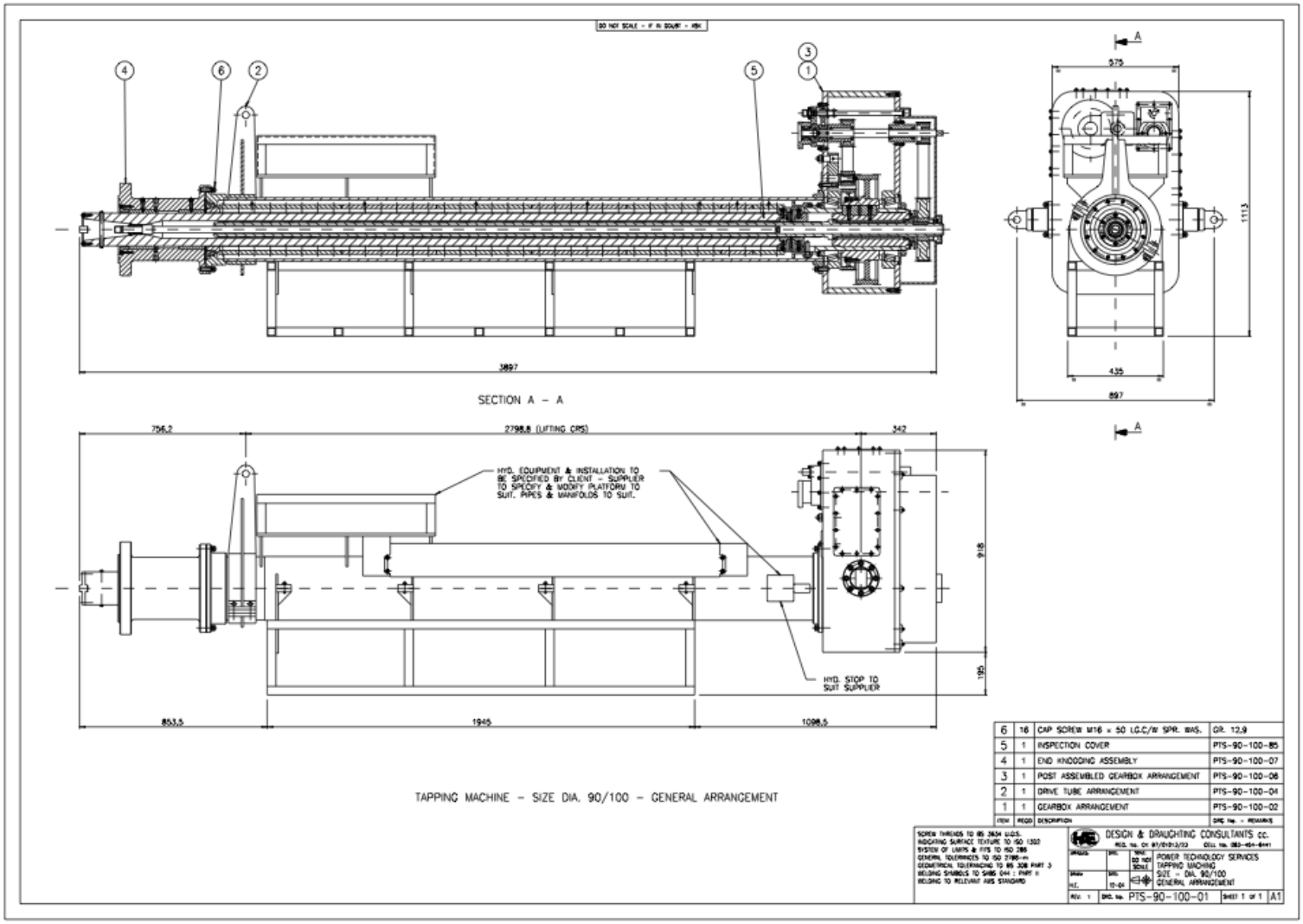
DO NOT SCALE - IF IN DOUBT - ASK
SECTION A – A
3897
575
1113
435
897
756.2
2798.8 (LIFTING CRS)
342
HYD. EQUIPMENT & INSTALLATION TO BE SPECIFIED BY CLIENT – SUPPLIER TO SPECIFY & MODIFY PLATFORM TO SUIT. PIPES & MANIFOLDS TO SUIT.
HYD. STOP TO SUIT SUPPLIER
918
195
853.5
1945
1098.5
TAPPING MACHINE – SIZE DIA. 90/100 – GENERAL ARRANGEMENT
6 | 16 | CAP SCREW M16 x 50 LG.C/W SPR. WAS. | GR. 12.9
5 | 1 | INSPECTION COVER | PTS-90-100-85
4 | 1 | END KNOGGING ASSEMBLY | PTS-90-100-07
3 | 1 | POST ASSEMBLED GEARBOX ARRANGEMENT | PTS-90-100-06
2 | 1 | DRIVE TUBE ARRANGEMENT | PTS-90-100-04
1 | 1 | GEARBOX ARRANGEMENT | PTS-90-100-02
ITEM | REQD | DESCRIPTION | DRG No. - REMARKS
DESIGN & DRAUGHTING CONSULTANTS cc.
POWER TECHNOLOGY SERVICES
TAPPING MACHINE
SIZE - DIA. 90/100
GENERAL ARRANGEMENT
PTS-90-100-01
SHEET 1 of 1
A1

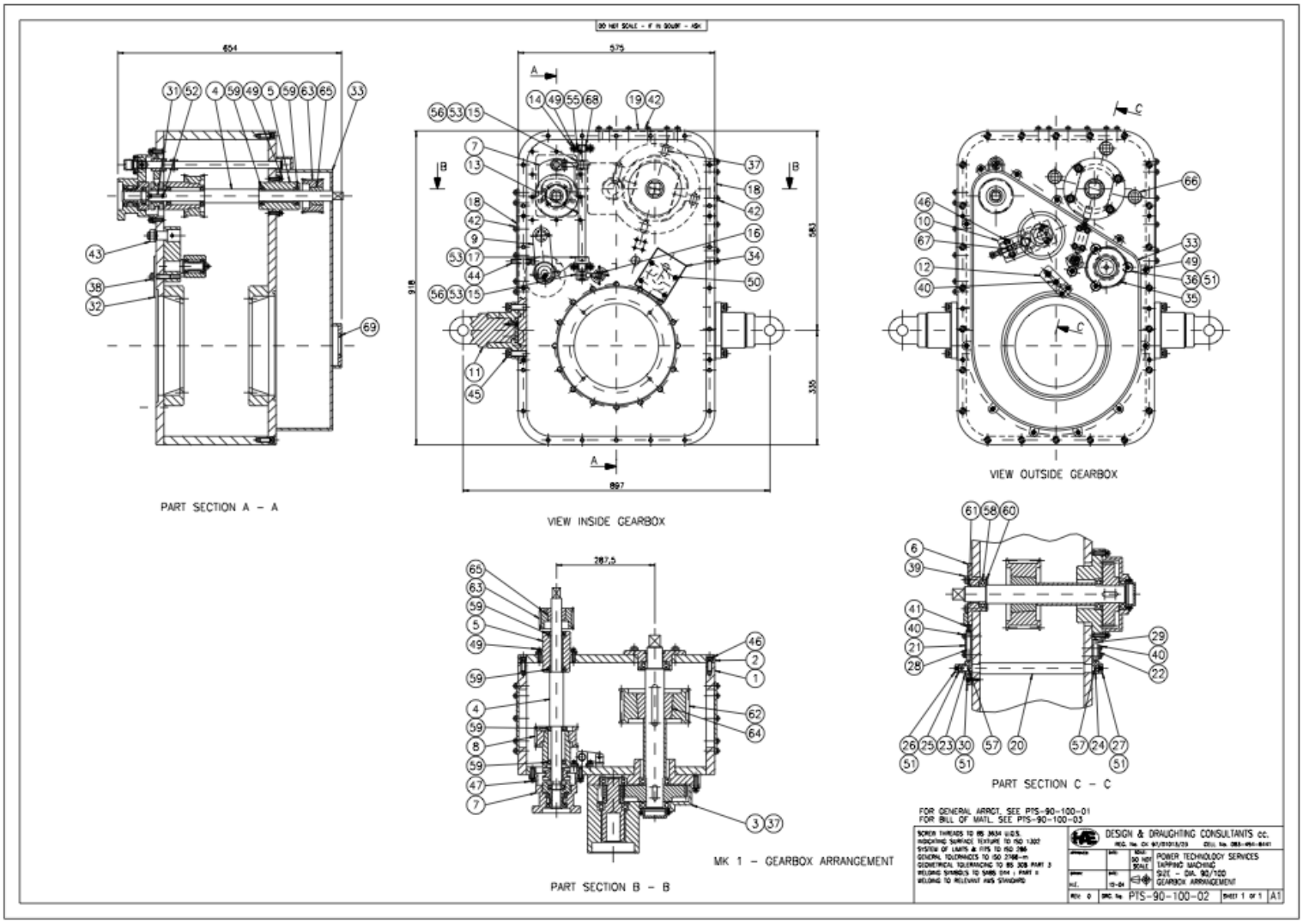
PART SECTION A – A
VIEW INSIDE GEARBOX
VIEW OUTSIDE GEARBOX
PART SECTION B – B
PART SECTION C – C
MK 1 – GEARBOX ARRANGEMENT
FOR GENERAL ARRGT. SEE PTS-90-100-01
FOR BILL OF MATL. SEE PTS-90-100-03
DESIGN & DRAUGHTING CONSULTANTS cc.
POWER TECHNOLOGY SERVICES
GEARBOX ARRANGEMENT
PTS-90-100-02

DO NOT SCALE - IF IN DOUBT - ASK

ITEM	REQD	DESCRIPTION	DRG No. - REMARKS
34	1	DEPTH INDICATOR GEARBOX ASSEMBLY	PTS-90-100-50
33	1	BELT COVER	PTS-90-100-49
32	1	TENSIONER PLATE	PTS-90-100-48
31	2	CLUTCH KEY	PTS-90-100-48
30	1	CAM RETAINER SLIDE	PTS-90-100-47
29	1	BLOCK PIN #2	PTS-90-100-45
28	1	BLOCK PIN #1	PTS-90-100-45
27	1	CAM RETAINER #2	PTS-90-100-46
26	1	CAM RETAINER #1	PTS-90-100-46
25	1	MAIN BELT CAM DRIVE	PTS-90-100-47
24	1	MAIN BELT TENSIONING CAM #2	PTS-90-100-47
23	1	MAIN BELT TENSIONING CAM #1	PTS-90-100-47
22	1	MAIN BELT TENSIONING BLOCK #2	PTS-90-100-46
21	1	MAIN BELT TENSIONING BLOCK #1	PTS-90-100-46
20	1	MAIN BELT TENSIONING SHAFT	PTS-90-100-45
19	1	INSPECTION COVER #2	PTS-90-100-44
18	2	INSPECTION COVER #1	PTS-90-100-44
17	1	SHAFT RETAINER	PTS-90-100-42
16	1	CLUTCH SHAFT FORK EXTENSION	PTS-90-100-43
15	2	CLUTCH SHAFT FORK	PTS-90-100-43
14	2	CLUTCH SHAFT BEARING BLOCK	PTS-90-100-43
13	1	CLUTCH SHAFT	PTS-90-100-42
12	1	CHAIN TENSIONER ASSEMBLY	PTS-90-100-40
11	2	LIFTING LUG ASSEMBLY	PTS-90-100-36
10	1	TENSIONER ASSEMBLY #2	PTS-90-100-33
9	1	TENSIONER ASSEMBLY #1	PTS-90-100-30
8	1	SHAFT BEARING HOUSING ASSEMBLY #3	PTS-90-100-28
7	1	DOG CLUTCH HOUSING ASSEMBLY	PTS-90-100-22
6	1	BEARING HOUSING #2	PTS-90-100-21
5	1	BEARING HOUSING #1	PTS-90-100-20
4	1	SHAFT	PTS-90-100-19
3	1	MAIN DRIVE GEARBOX ASSEMBLY	PTS-90-100-13
2	1	GEARBOX HOUSING COVER	PTS-90-100-12
1	1	GEARBOX HOUSING	PTS-90-100-10

68	2	DU-BUSH 20 x 22 x 16 LG.	GLACIER
67	2	DOWEL DIA. 8 x 45 LG.	DIN. 6325
66	3	SQUARE TAPER PLUG 1 1/4 " BSPT.	
65	1	TAPER LOCK No. 1615-30	FENNER
64	1	TAPER LOCK No. 3030-55	FENNER
63	1	SPROCKET No. 38-8M-50	FENNER
62	1	SPROCKET No. 44-14M-85	FENNER
61	1	OIL SEAL 45 x 60 x 7	ANGUS-H
60	1	INTERNAL CIRCLIP NS. 85	DIN. 472
59	4	BEARING 30 x 55 x 13 No.6006-2RS	SKF.
58	1	BEARING 45 x 85 x 19 No.6209-2RS	SKF.
57	3	KEY 5x5x10 LG. DOUBLE BULL NOSE	SAE 1045
56	2	KEY 6x6x27 LG. DOUBLE BULL NOSE	SAE 1045
55	4	DOWEL PIN DIA. 5 x 10 LG.	DIN. 6325
54	4	DOWEL PIN DIA. 12 x 50 LG.	DIN. 7979
53	3	GRUB SCREW M6 x 10 LG.	GR. 12,9
52	4	CAP SCREW M3 x 10 LG.	GR. 12,9
51	6	CAP SCREW M6 x 25 LG.	GR. 12,9
50	4	CAP SCREW M6 x 60 LG.C/W SPR.WAS.	GR. 12,9
49	20	CAP SCREW M8 x 30 LG.	GR. 12,9
48	2	CAP SCREW M8 x 40 LG.	GR. 12,9
47	10	CAP SCREW M10 x 30 LG.	GR. 12,9
46	28	CAP SCREW M12 x 30 LG.	GR. 12,9
45	16	CAP SCREW M16 x 45 LG.	GR. 12,9
44	1	HEX BOLT M12 x 60 LG.C/W NUT & WAS.	GR. 8,8
43	1	HEX NUT M20 C/W SPR.WAS.	GR. 8
42	42	HEX BOLT M8 x 20 LG.C/W FLAT WAS.	GR. 8,8
41	1	HEX BOLT M8 x 25 LG.C/W NUT & WAS.	GR. 8,8
40	8	HEX BOLT M8 x 40 LG.C/W FLAT WAS.	GR. 8,8
39	4	HEX BOLT M12 x 35 LG.C/W FLAT WAS.	GR. 8,8
38	1	HEX BOLT M12 x 50 LG.C/W FLAT WAS.	GR. 8,8
37	4	HEX BOLT M16 x 50 LG.C/W FLAT WAS.	GR. 8,8
36	3	GEARBOX RETAINER	PTS-90-100-48
35	1	CHAIN GEARBOX	PTS-90-100-54

69	1	OIL SEAL 50 x 70 x 7	ANGUS-H

FOR GENERAL ARRGT. SEE PTS-90-100-01
FOR GEARBOX ARRGT. SEE PTS-90-100-02

SCREW THREADS TO BS 3634 U.O.S.
INDICATING SURFACE TEXTURE TO ISO 1302
SYSTEM OF LIMITS & FITS TO ISO 286
GENERAL TOLERANCES TO ISO 2768-m
GEOMETRICAL TOLERANCING TO BS 308 PART 3
WELDING SYMBOLS TO SABS 044 : PART II
WELDING TO RELEVANT AWS STANDARD

DESIGN & DRAUGHTING CONSULTANTS cc.
REG. No. CK 97/01013/23 CELL No. 083-454-8441

APPROVED:	DATE:	SCALE: DO NOT SCALE	POWER TECHNOLOGY SERVICES TAPPING MACHINE
DRAWN: H.E.	DATE: 12-04		SIZE - DIA. 90/100 GEARBOX ARRGT. - BILL OF MATL
REV: 0	DRG. No. PTS-90-100-03		SHEET 1 OF 1 A2

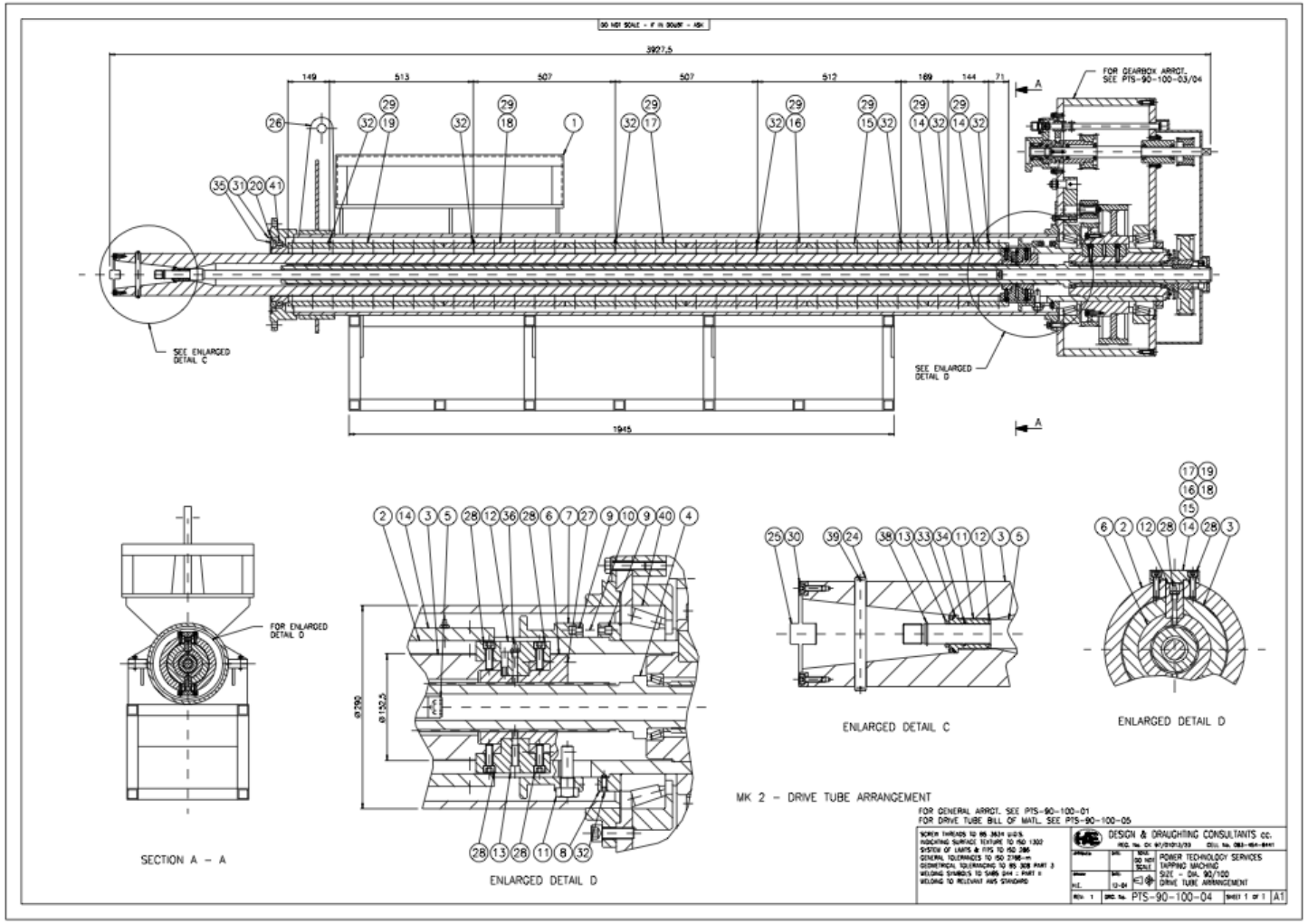
3927,5
149
513
507
507
512
189
144
71
FOR GEARBOX ARRGT.
SEE PTS-90-100-03/04
SEE ENLARGED DETAIL C
SEE ENLARGED DETAIL D
1945
FOR ENLARGED DETAIL D
SECTION A – A
ENLARGED DETAIL D
ENLARGED DETAIL C
ENLARGED DETAIL D
MK 2 – DRIVE TUBE ARRANGEMENT
FOR GENERAL ARRGT. SEE PTS-90-100-01
FOR DRIVE TUBE BILL OF MATL. SEE PTS-90-100-05
DESIGN & DRAUGHTING CONSULTANTS cc.
POWER TECHNOLOGY SERVICES
TAPPING MACHINE
SIZE – DN. 90/100
DRIVE TUBE ARRANGEMENT
PTS-90-100-04
A1

DO NOT SCALE - IF IN DOUBT - ASK

MK 2 – DRIVE TUBE ARRANGEMENT – BILL OF MATERIAL

ITEM	REQD	DESCRIPTION	DRG No. - REMARKS
27	6	CAP SCREW M12 x 35 LG.	GR. 12,9
26	1	LIFTING RING ASSEMBLY	PTS-90-100-71
25	1	DOG COUPLING	PTS-90-100-70
24	1	STOPPING PIN	PTS-90-100-70
23	1	LOCKING SCREW SPACER #2	PTS-90-100-60
22	1	LOCKING SCREW SPACER #1	PTS-90-100-60
21	1	LOCKING SCREW NUT	PTS-90-100-60
20	2	SEAL RETAINER	PTS-90-100-69
19	2	OUTER TUBE COVER #6	PTS-90-100-68
18	2	OUTER TUBE COVER #5	PTS-90-100-68
17	2	OUTER TUBE COVER #4	PTS-90-100-67
16	2	OUTER TUBE COVER #3	PTS-90-100-67
15	2	OUTER TUBE COVER #2	PTS-90-100-66
14	4	OUTER TUBE COVER #1	PTS-90-100-66
13	1	SCREW NUT KEY #2	PTS-90-100-65
12	1	SCREW NUT KEY #1	PTS-90-100-65
11	4	STOPPING RING LOCATER	PTS-90-100-64
10	4	COMPRESSION SPRING	PTS-90-100-64
9	8	SPRING LOCATER	PTS-90-100-64
8	1	STOPPING RING #2	PTS-90-100-63
7	1	STOPPING RING #1	PTS-90-100-62
6	1	SCREW NUT	PTS-90-100-61
5	1	CUTTER LOCKING BAR	PTS-90-100-60
4	1	BOARING BAR SCREW	PTS-90-100-59
3	1	BOARING BAR	PTS-90-100-58
2	1	OUTER TUBE	PTS-90-100-57
1	1	MAIN HOUSING	PTS-90-100-55

41	1	BEARING 190 x 240 x 24 No. 61838	SKF.
40	2	BEARING 190 x 290 x 64 No. 32038X	SKF.
39	2	SPLIT PIN DIA. 2 x 25 LG.	DIN. 94
38	1	EXTERNAL CIRCLIP NS. 1 1/8 "	MS 16624
37	14	GREASE NIPPLE M8	STRAIGHT
36	1	GREASE NIPPLE M10	STRAIGHT
35	1	OIL SEAL 190 x 230 x 24 No.N57-190	WALKER
34	1	O-RING	
33	1	O-RING	
32	4	GRUB SCREW M8 x 16 LG.	GR. 12,9
31	12	CSK. CAP SCREW M6 x 16 LG.	GR. 12,9
30	6	CAP SCREW M8 x 25 LG.	GR. 12,9
29	228	CAP SCREW M8 x 30 LG.	GR. 12,9
28	4	CAP SCREW M10 x 30 LG.	GR. 12,9

FOR GENERAL ARRGT. SEE PTS-90-100-01
FOR DRIVE TUBE ARRGT. SEE PTS-90-100-04

SCREW THREADS TO BS 3634 U.O.S.
INDICATING SURFACE TEXTURE TO ISO 1302
SYSTEM OF LIMITS & FITS TO ISO 286
GENERAL TOLERANCES TO ISO 2768-m
GEOMETRICAL TOLERANCING TO BS 308 PART 3
WELDING SYMBOLS TO SABS 044 : PART II
WELDING TO RELEVANT AWS STANDARD

DESIGN & DRAUGHTING CONSULTANTS cc.
REG. No. CK 97/01013/23 CELL No. 083-454-6441

APPROVED:	DATE:	SCALE: DO NOT SCALE	POWER TECHNOLOGY SERVICES TAPPING MACHINE
DRAWN: H.E.	DATE: 12-04		SIZE - DIA. 90/100 DRIVE TUBE - BILL OF MATL.
REV: 0	DRG. No. PTS-90-100-05		SHEET 1 OF 1 A2

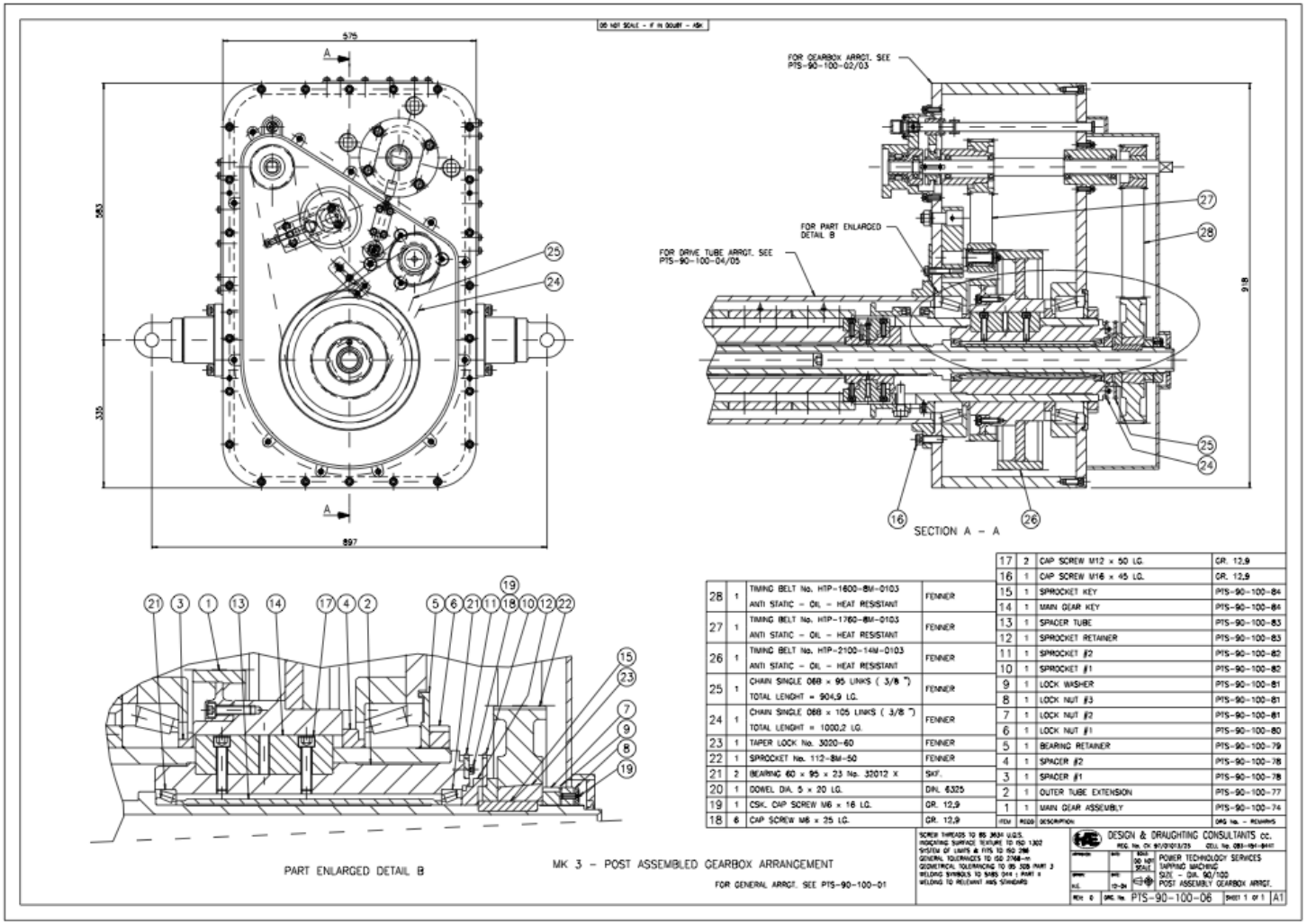

ITEM	REQD	DESCRIPTION	DRG No. - REMARKS
28	1	TIMING BELT No. HTP-1600-8M-0103 ANTI STATIC - OIL - HEAT RESISTANT	FENNER
27	1	TIMING BELT No. HTP-1760-8M-0103 ANTI STATIC - OIL - HEAT RESISTANT	FENNER
26	1	TIMING BELT No. HTP-2100-14M-0103 ANTI STATIC - OIL - HEAT RESISTANT	FENNER
25	1	CHAIN SINGLE 06B × 95 LINKS (3/8 ") TOTAL LENGHT = 904,9 LG.	FENNER
24	1	CHAIN SINGLE 06B × 105 LINKS (3/8 ") TOTAL LENGHT = 1000,2 LG.	FENNER
23	1	TAPER LOCK No. 3020-60	FENNER
22	1	SPROCKET No. 112-8M-50	FENNER
21	2	BEARING 60 × 95 × 23 No. 32012 X	SKF.
20	1	DOWEL DIA. 5 × 20 LG.	DIN. 6325
19	1	CSK. CAP SCREW M6 × 16 LG.	GR. 12,9
18	6	CAP SCREW M6 × 25 LG.	GR. 12,9
17	2	CAP SCREW M12 × 50 LG.	GR. 12,9
16	1	CAP SCREW M16 × 45 LG.	GR. 12,9
15	1	SPROCKET KEY	PTS-90-100-84
14	1	MAIN GEAR KEY	PTS-90-100-84
13	1	SPACER TUBE	PTS-90-100-83
12	1	SPROCKET RETAINER	PTS-90-100-83
11	1	SPROCKET #2	PTS-90-100-82
10	1	SPROCKET #1	PTS-90-100-82
9	1	LOCK WASHER	PTS-90-100-81
8	1	LOCK NUT #3	PTS-90-100-81
7	1	LOCK NUT #2	PTS-90-100-81
6	1	LOCK NUT #1	PTS-90-100-80
5	1	BEARING RETAINER	PTS-90-100-79
4	1	SPACER #2	PTS-90-100-78
3	1	SPACER #1	PTS-90-100-78
2	1	OUTER TUBE EXTENSION	PTS-90-100-77
1	1	MAIN GEAR ASSEMBLY	PTS-90-100-74

POWER
TECHNOLOGY SERVICES LIMITED

PMI

CONTACTS

Steve Foster M: +971 52 795 1548 - E: steve@hvwwg.com
M. UK: +44 7517 316 516 M. IND: +91 97177 32523